BENSHAW
Applied Motor Controls

Product Catalog

JULY 2025 EDITION

Molded case Circuit Breakers

Rapid | Rugged | Global

CONTENTS

Introduction 3

R2CB Series Information

Part Number Assembler 4
100F, 150F, 250F Ratings 5
100F, 150F, 250F Accessories Overview 6
400F, 600F Ratings 7
400F, 600F Accessories Overview 8
800F, 1200F Ratings 9
800F, 1200F Accessories Overview 10

R2CB Series Pricing

100F Frame 11
150F Frame 12
250F Frame 13
400F Frame 14
600F Frame 15
800F Frame 16
1200F Frame 17

Accessories Pricing

Rotary Operator and Shaft Extension 18
Flange Handle and Operating Mechanism 19
Auxiliary Switch 19
Bus Bar Connector 20
Mechanical Interlock 20
Shunt Trip 20

Trip Curves 100F - 600F

100F Frame 21
150F Frame 22
250F Frame 23
400F Frame 24
600F Frame 25

Trip Units and Curves 800F - 1200F

Trip Unit Overview 26
Trip Curves, Short-Time Delay 800F and 1200F 27
Trip Curves, Long-Time Delay 28
Trip Curves, Instantaneous and Ground Fault 29

Dimensions

100F Frame 30
150F/250F Frame 33
400F/600F Frame 36
800F/1200F Frame 39

Introduction

Benshaw Molded Case Circuit Breaker UL 489 Listed.

The Benshaw R2CB Series of Molded Case Circuit Breakers is designed to provide overload and short-circuit protection for industrial electrical equipment. Available in seven different compact frame sizes, the Benshaw MCCB is a safe, reliable solution for applications from 15 to 1200 Amps.

Standard Features:

- High short-circuit interrupting ratings - up to 100kA @ 480V
- Fixed Thermal trip settings
- Mechanical Lugs (Line and Load Side included)
- Mounting-Hardware (Screws included)
- Handle and cable ordered separately
- Suitable for reverse feed applications
- Compact frame
- 800-1200 Amp breakers have electronic trip (see page 26)

R2CB SERIES

The following circuit breaker models have been tested to provide current limiting capabilities:

100F	E, N
150F	N, H, L
250F	N, H, L
400F	N, H, L

600F	N, H, L
800F	H, L
1200F	H, L

R2CB PART NUMBER ASSEMBLER

R2CB | 40A | 100F | 3P | EF | FTU

R2 Series
CB = Circuit Breaker

Amperes

15	20	25
30	40	50
60	70	80
90	100	125
150	175	200
225	250	300
400	500	600
800	1000	1200

Frame Size

100
150
250
400
600
800
1200

Poles
3P = Three

Trip Unit
FTU = Fixed Thermal, Fixed Magnetic (100F - 600F)
NG0 = 60Hz Option (800F - 1200F)

Fault @ 480VAC

EF = Standard Fault	25kA (100F Frame Size)
NF = Normal Fault	35kA (100F - 800F Frame Size)
HF = High Fault	65kA (100F - 1200F Frame Size)
LF = Extra High Fault	100kA (150F - 1200F Frame Size)
PF = Standard Fault	50kA (1200F Frame Size)

SERIES OVERVIEW

Molded-Case Circuit Breaker 100F, 150F, 250F

FRAME		100F			150F			250F		
Maximum Rated Current		100A	100A	30A	150A			250A		
Number of Poles		3	3	3	3			3		
Breaker Type		EF	NF	HF	NF	HF	LF	NF	HF	LF
UL489/CSA C22.2		**100F**			**150F**			**250F**		
Interrupting Capacity (kA rms) AC(50/60HZ) UL,CSA	120/240V	50	65	100	-	-	-	-	-	-
	240Vac	50	65	100	65	100	150	65	100	150
	480Vac	25	35	65	35	65	100	35	65	100
	600Vac	-			18	35	50	18	35	50
	600Y/347Vac	14	18	35	-	-	-	-	-	-
UL489 DC		**100F**			**150F**			**250F**		
Interrupting Capacity	250V dc-2P	16	25	-	35	50	65	35	50	65
(kA) DC	500V dc-3P	25	35	-	-	-	-	-	-	-
UL, CSA	600V dc-3P	-			35	50	65	35	50	65
IEC 60947-2		**100F**			**150F**			**250F**		
Ultimate Breaking Capacity,	220/240V	50	65	65	65	100	150	65	100	150
(kA rms) AC	380/415V	25	35	35	35	65	100	35	65	100
50/60Hz, Icu	480/500V	-			18	35	50	18	35	50
Service Breaking Capacity, Ics (%Icu)		100%			100%			100%		
Insulation Voltage, UI		750 Vac			750 Vac			750 Vac		
Impulse Withstand Voltage, UImp		8 kVac			8 kVac			8 kVac		
Rated Short-Time Withstand Current (Icw)		-			-			-		
Utilization Category		A			A			A		

SERIES OVERVIEW

Accessories Overview for Circuit Breaker 100F, 150F, 250F

FRAME	100F			150F			250F		
Unit Mounted (allows for direct connection to busbar)	std			std			std		
Mechanical Line and Load Lugs	std			std			std		
Busbar Connectors	opt			opt			opt		
Terminal Shields	std			std			std		
Shunt Trip	opt			opt			opt		
Auxiliary Switch	opt			opt			opt		
Flange Cable Handle and Mechanism	opt			opt			opt		
NEMA-Door-Mounted Rotary Operating Handle and Mechanism	opt			opt			opt		
Mechanical Interlocking Device	opt			opt			opt		
Weight Lbs. (kg)	2.33(1.06)			3.95(1.79)			4.49(2.04)		
Dimensions Inches (mm) W x H x D	W	H	D	W	H	D	W	H	D
	2.99 (76)	5.12 (130)	3.44 (87.5)	4.13 (105)	6.50 (165)	3.44 (87.5)	4.13 (105)	7.48 (190)	3.44 (87.5)

UL MOLDED CASE CIRCUIT BREAKERS

Molded-Case Circuit Breaker 400F, 600F

FRAME		400F			600F		
Maximum Rated Current			400A			600A	
Number of Poles			3			3	
Breaker Type		NF	HF	LF	NF	HF	LF
UL489/CSA C22.2			**400F**			**600F**	
Interrupting Capacity (kA rms) AC(50/60HZ) UL,CSA	120/240V	-	-	-	-	-	-
	240V ac	65	100	150	65	100	150
	480V ac	35	65	100	35	65	100
	600V ac	18	35	50	18	35	50
	600Y/347Vac	-	-	-	-	-	-
UL489 DC			**400F**			**600F**	
Interrupting Capacity	250V dc-2P	35	50	65	35	50	65
(kA) DC	600V dc-3P	-	-	-	-	-	-
UL, CSA	600V dc-3P	35	50	65	35	50	65
IEC 60947-2			**400F**			**600F**	
Ultimate Breaking Capacity,	220/240V	65	100	150	65	100	150
(kA rms) AC	380/415V	35	65	100	35	65	100
50/60Hz, Icu	480/500V	18	35	50	18	35	50
Service Breaking Capacity, Ics (%Icu)			100%			100%	
Insulation Voltage, Ui			750 Vac			750 Vac	
Impulse Withstand Voltage, UImp			8kVac			8 kVac	
Rated Short-Time Withstand Current (Icw)			-			-	
Utilization Category			A			A	

UL MOLDED CASE CIRCUIT BREAKERS

Accessories Overview for Circuit Breaker 400F, 600F

FRAME	400F			600F		
Unit Mounted (allows for direct connection to busbar)	std			std		
Mechanical Line and Load Lugs	std			std		
Busbar Connectors	opt			opt		
Terminal Shields	std			std		
Shunt Trip	opt			opt		
Auxiliary Switch	opt			opt		
Flange Cable Handle and Mechanism	opt			opt		
NEMA-Door-Mounted Rotary Operating Handle and Mechanism	opt			opt		
Mechanical Interlocking Device	opt			opt		
Weight Lbs. (kg)	13.89(6.30)			15.79(7.16)		
Dimensions Inches (mm) W x H x D	W	H	D	W	H	D
	5.51(140)	11.42(290)	4.33(110)	5.51(140)	13.39(340)	4.33(110)

UL MOLDED CASE CIRCUIT BREAKERS

Molded-Case Circuit Breaker 800F, 1200F

FRAME		800F			1200F		
Maximum Rated Current		800A			1200A		
Number of Poles		3			3		
Breaker Type		NF	HF	LF	PF	HF	LF
UL489/CSA C22.2		**800F**			**1200F**		
Interrupting Capacity (kA rms) AC(50/60HZ) UL,CSA	120/240V	-	-	-	-	-	-
	240V ac	65	100	150	65	100	150
	480V ac	35	65	100	50	65	100
	600V ac	18	35	50	50	25	35
	600Y/347Vac	-	-	-	-	-	-
UL489 DC		**800F**			**1200F**		
Interrupting Capacity	250V dc-2P	-			-		
(kA) DC	500V dc-3P	-			-		
UL, CSA	600V dc-3P	-			-		
IEC 60947-2		**800F**			**1200F**		
Ultimate Breaking Capacity,	220/240V	65	100	150	65	100	150
(kA rms) AC	380/415V	35	65	100	50	65	100
50/60Hz, Icu	480/500V	18	35	50	50	35	50
Service Breaking Capacity, Ics (%Icu)		100%			100%		
Insulation Voltage, Ui		1000 Vac			1000 Vac		
Impulse Withstand Voltage, UImp		8 kVac			8 kVac		
Rated Short-Time Withstand Current (Icw)		18kA	-	-	25kA	-	-
Utilization Category		B	A	A	B	A	A

UL MOLDED CASE CIRCUIT BREAKERS

Accessories Overview for Circuit Breaker 800F, 1200F

FRAME	800F			1200F		
Unit Mounted (allows for direct connection to busbar)	std			std		
Mechanical Line and Load Lugs	std			std		
Busbar Connectors	opt			opt		
Terminal Shields	std			std		
Shunt Trip	opt			opt		
Auxiliary Switch	opt			opt		
Flange Cable Handle and Mechanism	opt			opt		
NEMA-Door-Mounted Rotary Operating Handle and Mechanism	opt			opt		
Mechanical Interlocking Device	opt			opt		
Weight Lbs. (kg)	31.35(14.22)			48.28 (18.27)		
Dimensions Inches (mm) W x H x D	W	H	D	W	H	D
	8.27(210)	12.88(327.2)	6(152.5)	8.27(210)	16.26(413)	6(152.5)

R2CB SERIES CIRCUIT BREAKERS - FIXED THERMAL, FIXED MAGNETIC

WEB STOCKED

100F Frame Standard Fault Rating

Model Number	Thermal Setting	Magnetic Setting	Short Circuit Interrupting Capacity (kA)			List Price
	Amps	Amps	240VAC	480VAC	600VAC	
R2CB-15A-100F-3P-EF-FTU	15	400A	50	25	N/A	$378
R2CB-20A-100F-3P-EF-FTU	20	400A	50	25	N/A	$378
R2CB-25A-100F-3P-EF-FTU	25	400A	50	25	N/A	$378
R2CB-30A-100F-3P-EF-FTU	30	400A	50	25	N/A	$378
R2CB-40A-100F-3P-EF-FTU	40	400A	50	25	N/A	$378
R2CB-50A-100F-3P-EF-FTU	50	800A	50	25	N/A	$378
R2CB-60A-100F-3P-EF-FTU	60	800A	50	25	N/A	$378
R2CB-70A-100F-3P-EF-FTU	70	800A	50	25	N/A	$378
R2CB-80A-100F-3P-EF-FTU	80	800A	50	25	N/A	$378
R2CB-90A-100F-3P-EF-FTU	90	1000A	50	25	N/A	$378
R2CB-100A-100F-3P-EF-FTU	100	1000A	50	25	N/A	$378

Note: Line and load lugs and mounting hardware (screws) included as standard.

100F Frame Normal Fault Rating

Model Number	Thermal Setting	Magnetic Setting	Short Circuit Interrupting Capacity (kA)			List Price
	Amps	Amps	240VAC	480VAC	600VAC	
R2CB-15A-100F-3P-NF-FTU	15	400A	65	35	N/A	$378
R2CB-20A-100F-3P-NF-FTU	20	400A	65	35	N/A	$378
R2CB-25A-100F-3P-NF-FTU	25	400A	65	35	N/A	$378
R2CB-30A-100F-3P-NF-FTU	30	400A	65	35	N/A	$378
R2CB-40A-100F-3P-NF-FTU	40	400A	65	35	N/A	$378
R2CB-50A-100F-3P-NF-FTU	50	800A	65	35	N/A	$378
R2CB-60A-100F-3P-NF-FTU	60	800A	65	35	N/A	$378
R2CB-70A-100F-3P-NF-FTU	70	800A	65	35	N/A	$378
R2CB-80A-100F-3P-NF-FTU	80	800A	65	35	N/A	$378
R2CB-90A-100F-3P-NF-FTU	90	1000A	65	35	N/A	$378
R2CB-100A-100F-3P-NF-FTU	100	1000A	65	35	N/A	$378

Note: Line and load lugs and mounting hardware (screws) included as standard.

100F Frame High Fault Rating

Model Number	Thermal Setting	Magnetic Setting	Short Circuit Interrupting Capacity (kA)			List Price
	Amps	Amps	240VAC	480VAC	600VAC	
R2CB-15A-100F-3P-HF-FTU	15	400A	100	65	N/A	$536
R2CB-20A-100F-3P-HF-FTU	20	400A	100	65	N/A	$536
R2CB-25A-100F-3P-HF-FTU	25	400A	100	65	N/A	$536
R2CB-30A-100F-3P-HF-FTU	30	400A	100	65	N/A	$536

Note: Line and load lugs and mounting hardware (screws) included as standard.

Price Effective July 1, 2025

R2CB SERIES CIRCUIT BREAKERS - FIXED THERMAL, FIXED MAGNETIC

WEB STOCKED

150F Frame Normal Fault Rating

Model Number	Thermal Setting	Magnetic Setting	Short Circuit Interrupting Capacity (kA)			List Price
	Amps	Amps	240VAC	480VAC	600VAC	
R2CB-40A-150F-3P-NF-FTU	40	500A	65	35	18	$617
R2CB-50A-150F-3P-NF-FTU	50	500A	65	35	18	$617
R2CB-60A-150F-3P-NF-FTU	60	800A	65	35	18	$617
R2CB-70A-150F-3P-NF-FTU	70	800A	65	35	18	$617
R2CB-80A-150F-3P-NF-FTU	80	800A	65	35	18	$617
R2CB-90A-150F-3P-NF-FTU	90	1000A	65	35	18	$617
R2CB-100A-150F-3P-NF-FTU	100	1000A	65	35	18	$617
R2CB-125A-150F-3P-NF-FTU	125	1250A	65	35	18	$617
R2CB-150A-150F-3P-NF-FTU	150	1500A	65	35	18	$617

Note: Line and load lugs and mounting hardware (screws) included as standard.

150F Frame High Fault Rating

Model Number	Thermal Setting	Magnetic Setting	Short Circuit Interrupting Capacity (kA)			List Price
	Amps	Amps	240VAC	480VAC	600VAC	
R2CB-40A-150F-3P-HF-FTU	40	500A	100	65	35	$684
R2CB-50A-150F-3P-HF-FTU	50	500A	100	65	35	$684
R2CB-60A-150F-3P-HF-FTU	60	800A	100	65	35	$684
R2CB-70A-150F-3P-HF-FTU	70	800A	100	65	35	$684
R2CB-80A-150F-3P-HF-FTU	80	800A	100	65	35	$684
R2CB-90A-150F-3P-HF-FTU	90	1000A	100	65	35	$684
R2CB-100A-150F-3P-HF-FTU	100	1000A	100	65	35	$684
R2CB-125A-150F-3P-HF-FTU	125	1250A	100	65	35	$684
R2CB-150A-150F-3P-HF-FTU	150	1500A	100	65	35	$684

Note: Line and load lugs and mounting hardware (screws) included as standard.

150F Extra High Fault Rating

Model Number	Thermal Setting	Magnetic Setting	Short Circuit Interrupting Capacity (kA)			List Price
	Amps	Amps	240VAC	480VAC	600VAC	
R2CB-40A-150F-3P-LF-FTU	40	500A	150	100	50	$802
R2CB-50A-150F-3P-LF-FTU	50	500A	150	100	50	$802
R2CB-60A-150F-3P-LF-FTU	60	800A	150	100	50	$802
R2CB-70A-150F-3P-LF-FTU	70	800A	150	100	50	$802
R2CB-80A-150F-3P-LF-FTU	80	800A	150	100	50	$802
R2CB-90A-150F-3P-LF-FTU	90	1000A	150	100	50	$802
R2CB-100A-150F-3P-LF-FTU	100	1000A	150	100	50	$802
R2CB-125A-150F-3P-LF-FTU	125	1250A	150	100	50	$802
R2CB-150A-150F-3P-LF-FTU	150	1500A	150	100	50	$802

Note: Line and load lugs and mounting hardware (screws) included as standard.

Price Effective July 1, 2025

R2CB SERIES CIRCUIT BREAKERS - FIXED THERMAL, FIXED MAGNETIC

WEB STOCKED

250F Frame Normal Fault Rating

Model Number	Thermal Setting	Magnetic Setting	Short Circuit Interrupting Capacity (kA)			List Price
	Amps	Amps	240VAC	480VAC	600VAC	
R2CB-150A-250F-3P-NF-FTU	150	1500A	65	35	18	$869
R2CB-175A-250F-3P-NF-FTU	175	1750A	65	35	18	$869
R2CB-200A-250F-3P-NF-FTU	200	2000A	65	35	18	$869
R2CB-225A-250F-3P-NF-FTU	225	2250A	65	35	18	$869
R2CB-250A-250F-3P-NF-FTU	250	2500A	65	35	18	$869

Note: Line and load lugs and mounting hardware (screws) included as standard.

250F Frame High Fault Rating

Model Number	Thermal Setting	Magnetic Setting	Short Circuit Interrupting Capacity (kA)			List Price
	Amps	Amps	240VAC	480VAC	600VAC	
R2CB-150A-250F-3P-HF-FTU	150	1500A	100	65	35	$975
R2CB-175A-250F-3P-HF-FTU	175	1750A	100	65	35	$975
R2CB-200A-250F-3P-HF-FTU	200	2000A	100	65	35	$975
R2CB-225A-250F-3P-HF-FTU	225	2250A	100	65	35	$975
R2CB-250A-250F-3P-HF-FTU	250	2500A	100	65	35	$975

Note: Line and load lugs and mounting hardware (screws) included as standard.

250F Frame Extra High Fault Rating

Model Number	Thermal Setting	Magnetic Setting	Short Circuit Interrupting Capacity (kA)			List Price
	Amps	Amps	240VAC	480VAC	600VAC	
R2CB-150A-250F-3P-LF-FTU	150	1500A	150	100	50	$1,203
R2CB-175A-250F-3P-LF-FTU	175	1750A	150	100	50	$1,203
R2CB-200A-250F-3P-LF-FTU	200	2000A	150	100	50	$1,203
R2CB-225A-250F-3P-LF-FTU	225	2250A	150	100	50	$1,203
R2CB-250A-250F-3P-LF-FTU	250	2500A	150	100	50	$1,203

Note: Line and load lugs and mounting hardware (screws) included as standard.

R2CB SERIES CIRCUIT BREAKERS - FIXED THERMAL, FIXED MAGNETIC

WEB STOCKED

400F Frame Normal Fault Rating

Model Number	Thermal Setting	Magnetic Setting	Short Circuit Interrupting Capacity (kA)			List Price
	Amps	Amps	240VAC	480VAC	600VAC	
R2CB-250A-400F-3P-NF-FTU	250	2500A	65	35	18	$1,682
R2CB-300A-400F-3P-NF-FTU	300	3000A	65	35	18	$1,682
R2CB-400A-400F-3P-NF-FTU	400	4000A	65	35	18	$1,682

Note: Line and load lugs and mounting hardware (screws) included as standard.

400F Frame High Fault Rating

Model Number	Thermal Setting	Magnetic Setting	Short Circuit Interrupting Capacity (kA)			List Price
	Amps	Amps	240VAC	480VAC	600VAC	
R2CB-250A-400F-3P-HF-FTU	250	2500A	100	65	35	$1,883
R2CB-300A-400F-3P-HF-FTU	300	3000A	100	65	35	$1,883
R2CB-400A-400F-3P-HF-FTU	400	4000A	100	65	35	$1,883

Note: Line and load lugs and mounting hardware (screws) included as standard.

400F Frame Extra High Fault Rating

Model Number	Thermal Setting	Magnetic Setting	Short Circuit Interrupting Capacity (kA)			List Price
	Amps	Amps	240VAC	480VAC	600VAC	
R2CB-250A-400F-3P-LF-FTU	250	2500A	150	100	50	$2,314
R2CB-300A-400F-3P-LF-FTU	300	3000A	150	100	50	$2,314
R2CB-400A-400F-3P-LF-FTU	400	4000A	150	100	50	$2,314

Note: Line and load lugs and mounting hardware (screws) included as standard.

R2CB SERIES CIRCUIT BREAKERS - FIXED THERMAL, FIXED MAGNETIC

WEB STOCKED

600F Frame Normal Fault Rating

Model Number	Thermal Setting	Magnetic Setting	Short Circuit Interrupting Capacity (kA)			List Price
	Amps	Amps	240VAC	480VAC	600VAC	
R2CB-500A-600F-3P-NF-FTU	500	5000A	65	35	18	$2,530
R2CB-600A-600F-3P-NF-FTU	600	6000A	65	35	18	$2,530

Note: Line and load lugs and mounting hardware (screws) included as standard.

600F Frame High Fault Rating

Model Number	Thermal Setting	Magnetic Setting	Short Circuit Interrupting Capacity (kA)			List Price
	Amps	Amps	240VAC	480VAC	600VAC	
R2CB-500A-600F-3P-HF-FTU	500	5000A	100	65	35	$2,923
R2CB-600A-600F-3P-HF-FTU	600	6000A	100	65	35	$2,923

Note: Line and load lugs and mounting hardware (screws) included as standard.

600F Frame Extra High Fault Rating

Model Number	Thermal Setting	Magnetic Setting	Short Circuit Interrupting Capacity (kA)			List Price
	Amps	Amps	240VAC	480VAC	600VAC	
R2CB-500A-600F-3P-LF-FTU	500	5000A	150	100	50	$3,851
R2CB-600A-600F-3P-LF-FTU	600	6000A	150	100	50	$3,851

Note: Line and load lugs and mounting hardware (screws) included as standard.

Price Effective July 1, 2025

R2CB SERIES CIRCUIT BREAKERS - NORMAL TYPE TRIP UNIT

WEB STOCKED

800F Frame Normal Fault Rating

Model Number	Thermal Setting	Instantaneous Trip	Short Circuit Interrupting Capacity (kA)			List Price
	Amps	Amps	240VAC	480VAC	600VAC	
R2CB-600A-800F-3P-NF-NG0	600	Adjustable - (2 - 15) x Rated Current	65	35	18	$3,232
R2CB-800A-800F-3P-NF-NG0	800	Adjustable - (2 - 15) x Rated Current	65	35	18	$3,232

Note: Line and load lugs and mounting hardware included as standard.
NG0 is for a 60Hz supply only.
Consult factory for 50Hz applications.

800F Frame High Fault Rating

Model Number	Thermal Setting	Instantaneous Trip	Short Circuit Interrupting Capacity (kA)			List Price
	Amps	Amps	240VAC	480VAC	600VAC	
R2CB-600A-800F-3P-HF-NG0	600	Adjustable - (2 - 15) x Rated Current	100	65	35	$3,879
R2CB-800A-800F-3P-HF-NG0	800	Adjustable - (2 - 15) x Rated Current	100	65	35	$3,879

Note: Line and load lugs and mounting hardware included as standard.
NG0 is for a 60Hz supply only.
Consult factory for 50Hz applications.

800F Frame Extra High Fault Rating

Model Number	Thermal Setting	Instantaneous Trip	Short Circuit Interrupting Capacity (kA)			List Price
	Amps	Amps	240VAC	480VAC	600VAC	
R2CB-600A-800F-3P-LF-NG0	600	Adjustable - (2 - 15) x Rated Current	150	100	50	$4,265
R2CB-800A-800F-3P-LF-NG0	800	Adjustable - (2 - 15) x Rated Current	150	100	50	$4,265

Note: Line and load lugs and mounting hardware included as standard.
NG0 is for a 60Hz supply only.
Consult factory for 50Hz applications.

R2CB SERIES CIRCUIT BREAKERS - NORMAL TYPE TRIP UNIT

WEB STOCKED

1200F Frame Standard Fault Rating

Model Number	Thermal Setting	Instantaneous Trip	Short Circuit Interrupting Capacity (kA)			List Price
	Amps	Amps	240VAC	480VAC	600VAC	
R2CB-1000A-1200F-3P-PF-NG0	1000	Adjustable - (2 - 15) x Rated Current	65	50	50	$4,265
R2CB-1200A-1200F-3P-PF-NG0	1200	Adjustable - (2 - 15) x Rated Current	65	50	50	$4,265

Note: Line and load lugs and mounting hardware included as standard.
NG0 is for a 60Hz supply only.
Consult factory for 50Hz applications.

1200F Frame High Fault Rating

Model Number	Thermal Setting	Instantaneous Trip	Short Circuit Interrupting Capacity (kA)			List Price
	Amps	Amps	240VAC	480VAC	600VAC	
R2CB-1000A-1200F-3P-HF-NG0	1000	Adjustable - (2 - 15) x Rated Current	100	65	25	$4,368
R2CB-1200A-1200F-3P-HF-NG0	1200	Adjustable - (2 - 15) x Rated Current	100	65	25	$4,368

Note: Line and load lugs and mounting hardware included as standard.
NG0 is for a 60Hz supply only.
Consult factory for 50Hz applications.

1200F Frame Extra High Fault Rating

Model Number	Thermal Setting	Instantaneous Trip	Short Circuit Interrupting Capacity (kA)			List Price
	Amps	Amps	240VAC	480VAC	600VAC	
R2CB-1000A-1200F-3P-LF-NG0	1000	Adjustable - (2 - 15) x Rated Current	150	100	35	$5,576
R2CB-1200A-1200F-3P-LF-NG0	1200	Adjustable - (2 - 15) x Rated Current	150	100	35	$5,576

Note: Line and load lugs and mounting hardware included as standard.
NG0 is for a 60Hz supply only.
Consult factory for 50Hz applications.

R2CB SERIES CIRCUIT BREAKERS - ACCESSORIES

Rotary Operator and Shaft Extension

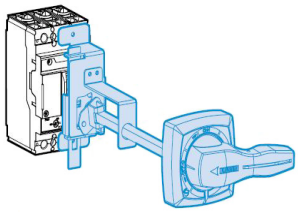

R2CB-EH [V0C12, X0C12]

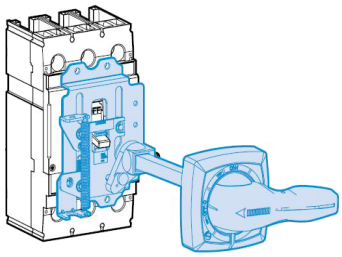

R2CB-EH [V212, X212]

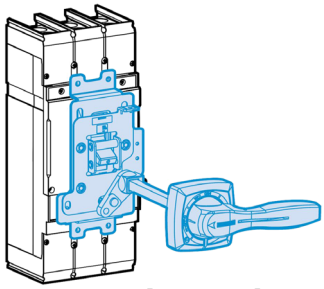

R2CB-EH [V312, X312]

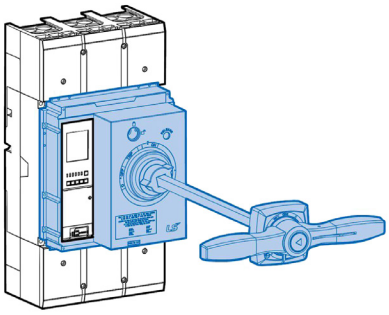

R2CB-EH [V512, X512]

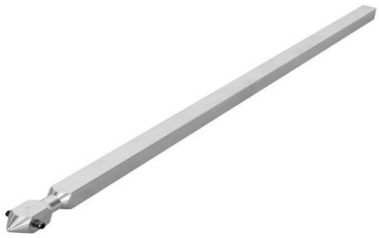

R2CB-ESHAFTXX

Model Number	Description	Frame	List Price
R2CB-EHU0C12	Front Mount Rotary Operator, NEMA Type: 1,12, 12inch Shaft	100F	$151
R2CB-EHV0C12	Front Mount Rotary Operator, NEMA Type: 3, 3R, 4, 12inch Shaft	100F	$151
R2CB-EHX0C12	Front Mount Rotary Operator, NEMA Type: 3, 4, 4X, 12inch Shaft	100F	$168
R2CB-EHU212	Front Mount Rotary Operator, NEMA Type: 1, 12, 12inch Shaft	150F / 250F	$191
R2CB-EHV212	Front Mount Rotary Operator, NEMA Type: 3, 3R, 4, 12inch Shaft	150F / 250F	$191
R2CB-EHX212	Front Mount Rotary Operator, NEMA Type: 3, 4, 4X, 12inch Shaft	150F / 250F	$212
R2CB-EHU312	Front Mount Rotary Operator, NEMA Type: 1, 12, 12inch Shaft	400F / 600F	$220
R2CB-EHV312	Front Mount Rotary Operator, NEMA Type: 3, 3R, 4, 12inch Shaft	400F / 600F	$220
R2CB-EHX312	Front Mount Rotary Operator, NEMA Type: 3, 4, 4X, 12inch Shaft	400F / 600F	$245
R2CB-EHU512	Front Mount Rotary Operator, NEMA Type: 1, 12, 12inch Shaft	800F / 1200F	$443
R2CB-EHV512	Front Mount Rotary Operator, NEMA Type: 3, 3R, 4, 12inch Shaft	800F / 1200F	$443
R2CB-EHX512	Front Mount Rotary Operator, NEMA Type: 3, 4, 4X, 12inch Shaft	800F / 1200F	$479
R2CB-ESHAFT16-100	Shaft for Extended Rotary Handle, 16inch Shaft	100F	$30
R2CB-ESHAFT24-100	Shaft for Extended Rotary Handle, 24inch Shaft	100F	$42
R2CB-ESHAFT16-600	Shaft for Extended Rotary Handle, 16inch Shaft	150F - 600F	$42
R2CB-ESHAFT24-600	Shaft for Extended Rotary Handle, 24inch Shaft	150F - 600F	$65
R2CB-ESHAFT16-1200	Shaft for Extended Rotary Handle, 16inch Shaft	800F / 1200F	$72
R2CB-ESHAFT24-1200	Shaft for Extended Rotary Handle, 24inch Shaft	800F / 1200F	$107

Price Effective July 1, 2025

R2CB SERIES CIRCUIT BREAKERS - ACCESSORIES

Flange Handle, Operating Mechanism and Cable

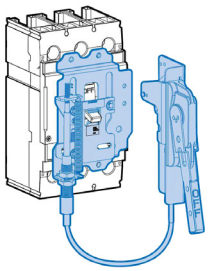

R2CB-FH [U2,X2]

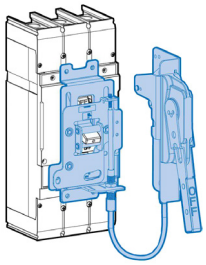

R2CB-FH [U3,X3]

R2CB-FH [US,XS]

R2CB-FH [2,3,5]

Model Number	Description	Frame	List Price
R2CB-FHUS*	Flange Handle with Cable Operating Mechanism, NEMA Type: 1,12, 3, 3R, 4	100F	$548
R2CB-FHXS*	Flange Handle with Cable Operating Mechanism, NEMA Type: 4, 4X	100F	$580
R2CB-FHU2*	Flange Handle with Sliding Operating Mechanism, NEMA Type: 1,12, 3, 3R, 4	150F / 250F	$409
R2CB-FHX2*	Flange Handle with Sliding Operating Mechanism, NEMA Type: 4, 4X	150F / 250F	$443
R2CB-FHU3*	Flange Handle with Sliding Operating Mechanism, NEMA Type: 1,12, 3, 3R, 4	400F / 600F	$409
R2CB-FHX3*	Flange Handle with Sliding Operating Mechanism, NEMA Type: 4, 4X	400F / 600F	$443
R2CB-FHUL*	Flange Handle with Sliding Operating Mechanism, NEMA Type: 1,12, 3, 3R, 4	800F / 1200F	$887
R2CB-FHXL*	Flange Handle with Sliding Operating Mechanism, NEMA Type: 4, 4X	800F / 1200F	$941
R2CB-FH2-36	Max Flex Cable 36inch	100F - 250F	$145
R2CB-FH2-48	Max Flex Cable 48inch	100F - 250F	$160
R2CB-FH3-36	Max Flex Cable 36inch	400F / 600F	$171
R2CB-FH3-48	Max Flex Cable 48inch	400F / 600F	$187
R2CB-FH3-60	Max Flex Cable 60inch	400F / 600F	$201
R2CB-FH5-60	Max Flex Cable 60inch	800F / 1200F	$215
R2CB-FH5-84	Max Flex Cable 84inch	800F / 1200F	$252
R2CB-FH5-120	Max Flex Cable 128inch	800F / 1200F	$323

*** Flange cable sold separately.**

Auxiliary Switch

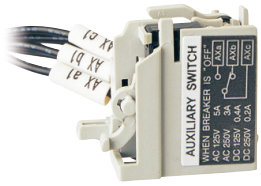

R2CB-AX-UTE100-R

R2CB-AX-UTSXX

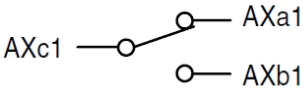

On

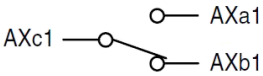

Off/Trip

Model Number	Description	Frame	List Price
R2CB-AX-UTE100-R	Aux 1 Form C (1no/1nc) for Frame 100 CB Left Pole Installation	100F	$30
R2CB-AX-UTS600	Aux 1 Form C (1no/1nc) for Frame 150 - 600 CB	150 - 600F	$30
R2CB-AX-UTS1200	Aux 1 Form C (1no/1nc) for Frame 800/1200 CB Right Pole Installation	800 / 1200F	$30

Price Effective July 1, 2025

R2CB SERIES CIRCUIT BREAKERS - ACCESSORIES

Bus Bar Connector

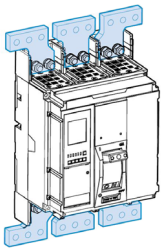

R2CB-SPXX

Model Number	Description	List Price
R2CB-SP03A	Bus Bar Connections Accessory for Frame 100, 3 Piece Set	$21
R2CB-SP2A3A	Bus Bar Connections Accessory for Frame 150, 3 Piece Set	$23
R2CB-SP2B3A	Bus Bar Connections Accessory for Frame 250, 3 Piece Set	$35
R2CB-SP33A	Bus Bar Connections Accessory for Frame 400/600, 3 Piece Set	$416
R2CB-SP53A	Bus Bar Connections Accessory for Frame 800/1200, 3 Piece Set	$613

Mechanical Interlock

R2CB-MITXX

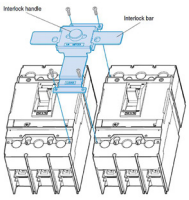

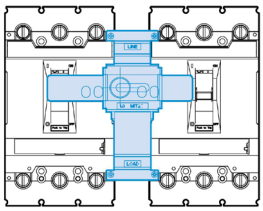

Model Number	Description	List Price
R2CB-MIT03	Mechanical Interlock Frame 100	$99
R2CB-MIT23	Mechanical Interlock Frame 150/250	$107
R2CB-MIT33	Mechanical Interlock Frame 400/600	$116
R2CB-MIT53	Mechanical Interlock Frame 800/1200	$122

Shunt Trip

R2CB-SHT-UTE100-120

R2CB-SHT-UTS600-120

R2CB-SHT-UTS1200-120

Model Number	Description	List Price
R2CB-SHT-UTE100-120	Shunt Trip for Frame 100 CB AC/DC 100-130vac Right Pole Installation	$58
R2CB-SHT-UTS600-120	Shunt Trip for Frame 150 - 600 CB AC/DC 100-130vac Left Pole Installation	$72
R2CB-SHT-UTS1200-120	Shunt Trip for Frame 800/1200 CB AC/DC 100-130vac Right Pole Installation	$145

Price Effective July 1, 2025

R2CB SERIES

Molded-Case Circuit Breakers

Frame 100 Trip Curves

This curve is to be used for application and coordination purposes only.
All time/current characteristic curve data is based on 40°C ambient cold start.

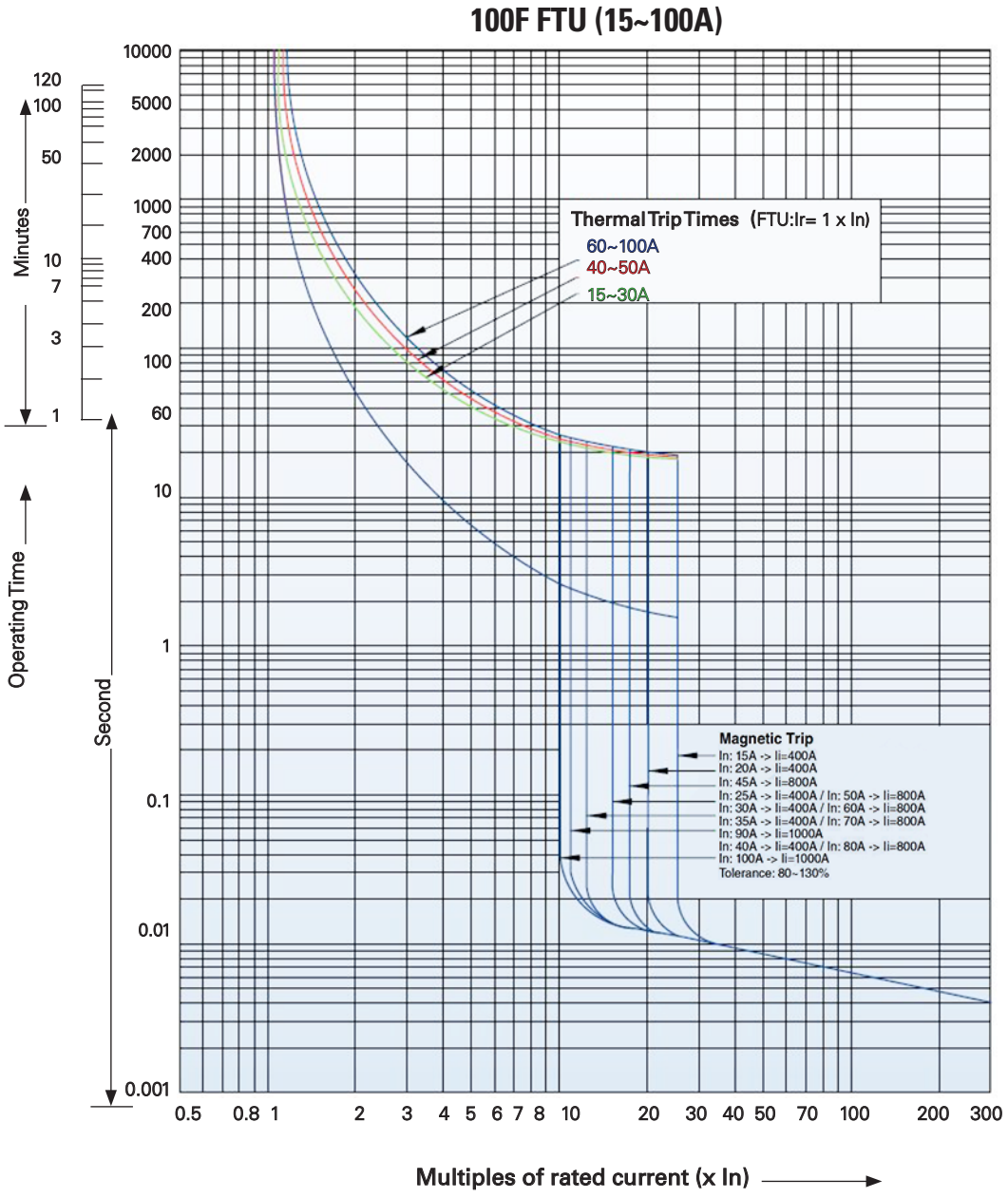

Rating	FTU	
100F	3P	Mag Trip (80%~130%)
15	•	400A
20	•	
25	•	
30	•	
35	•	
40	•	
45	•	800A
50	•	
60	•	
70	•	
80	•	
90	•	1000A
100	•	

R2CB SERIES

Molded-Case Circuit Breakers

Frame 150 Trip Curves

This curve is to be used for application and coordination purposes only.
All time/current characteristic curve data is based on 40°C ambient cold start.

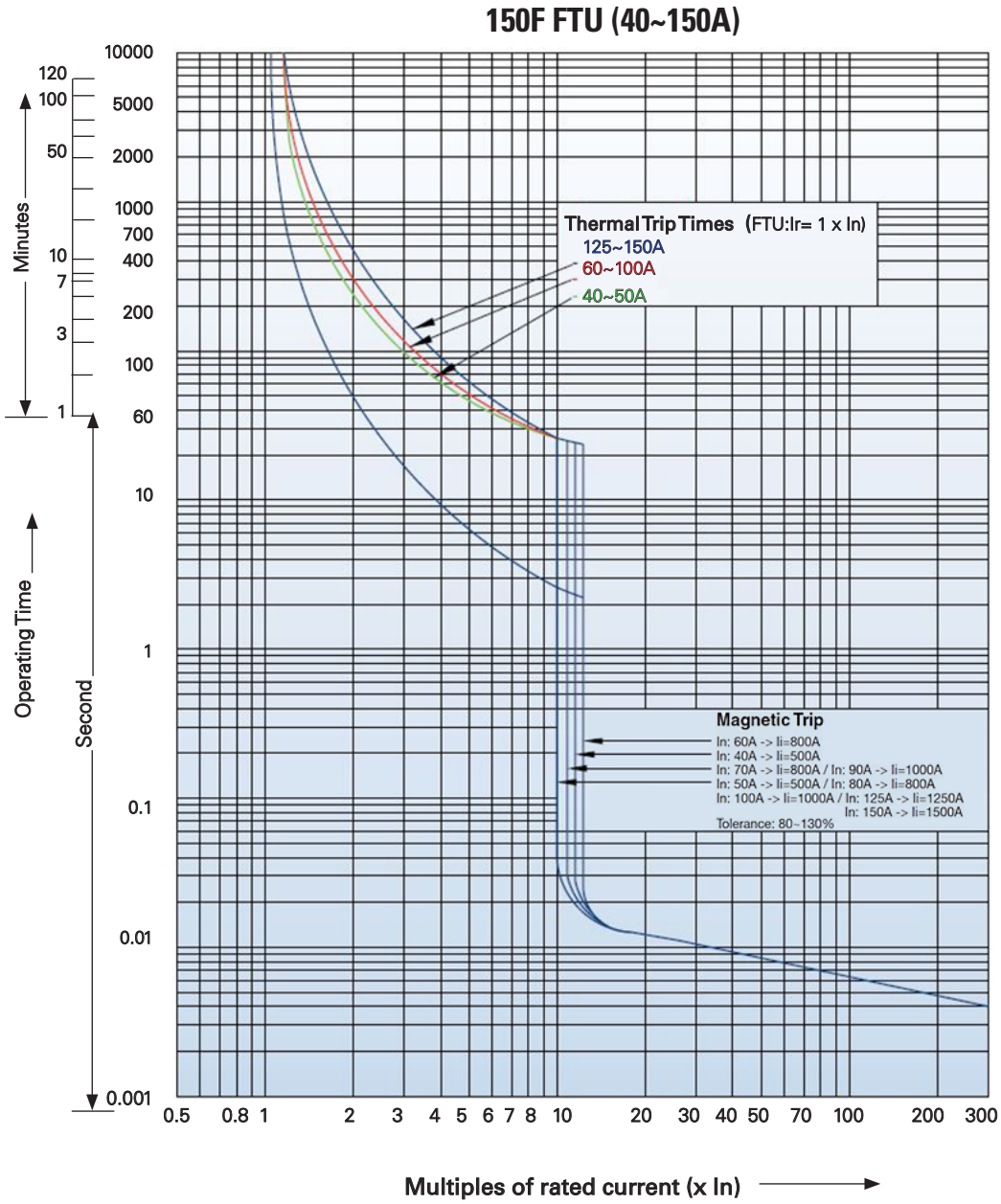

Rating	FTU	
150F	3P	Mag Trip (80%~130%)
40	•	500A
50	•	
60	•	800A
70	•	
80	•	
90	•	1000A
100	•	
125	•	1250A
150	•	1500A

R2CB SERIES

Molded-Case Circuit Breakers

Frame 250 Trip Curves

This curve is to be used for application and coordination purposes only.
All time/current characteristic curve data is based on 40°C ambient cold start.

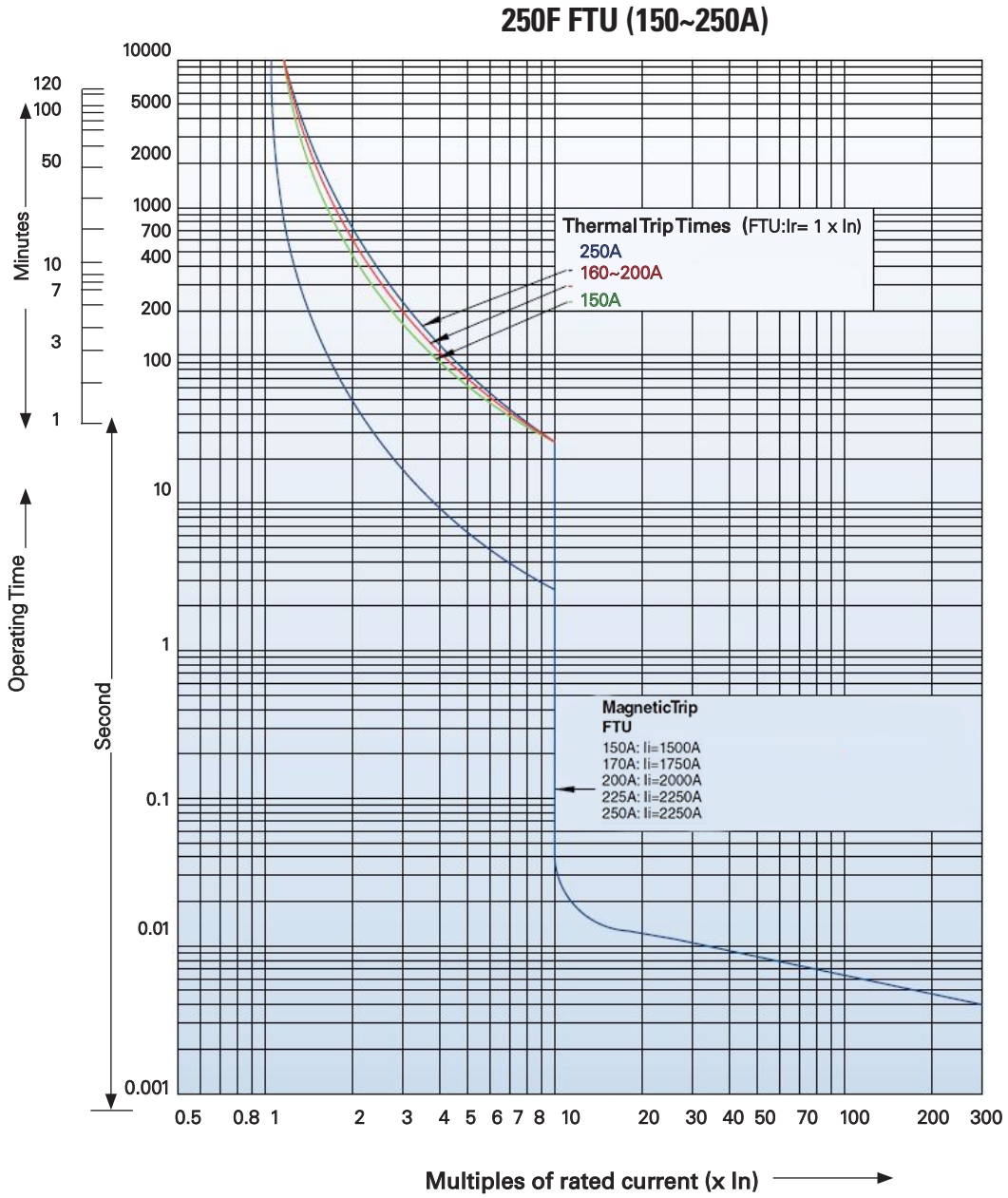

Rating	FTU	
250F	3P	Mag Trip (80%~130%)
150	•	1500A
175	•	1750A
200	•	2000A
225	•	2250A
250	•	2500A

R2CB SERIES

Molded-Case Circuit Breakers

Frame 400 Trip Curves

This curve is to be used for application and coordination purposes only.
All time/current characteristic curve data is based on 40°C ambient cold start.

400F FTU (250~400A)

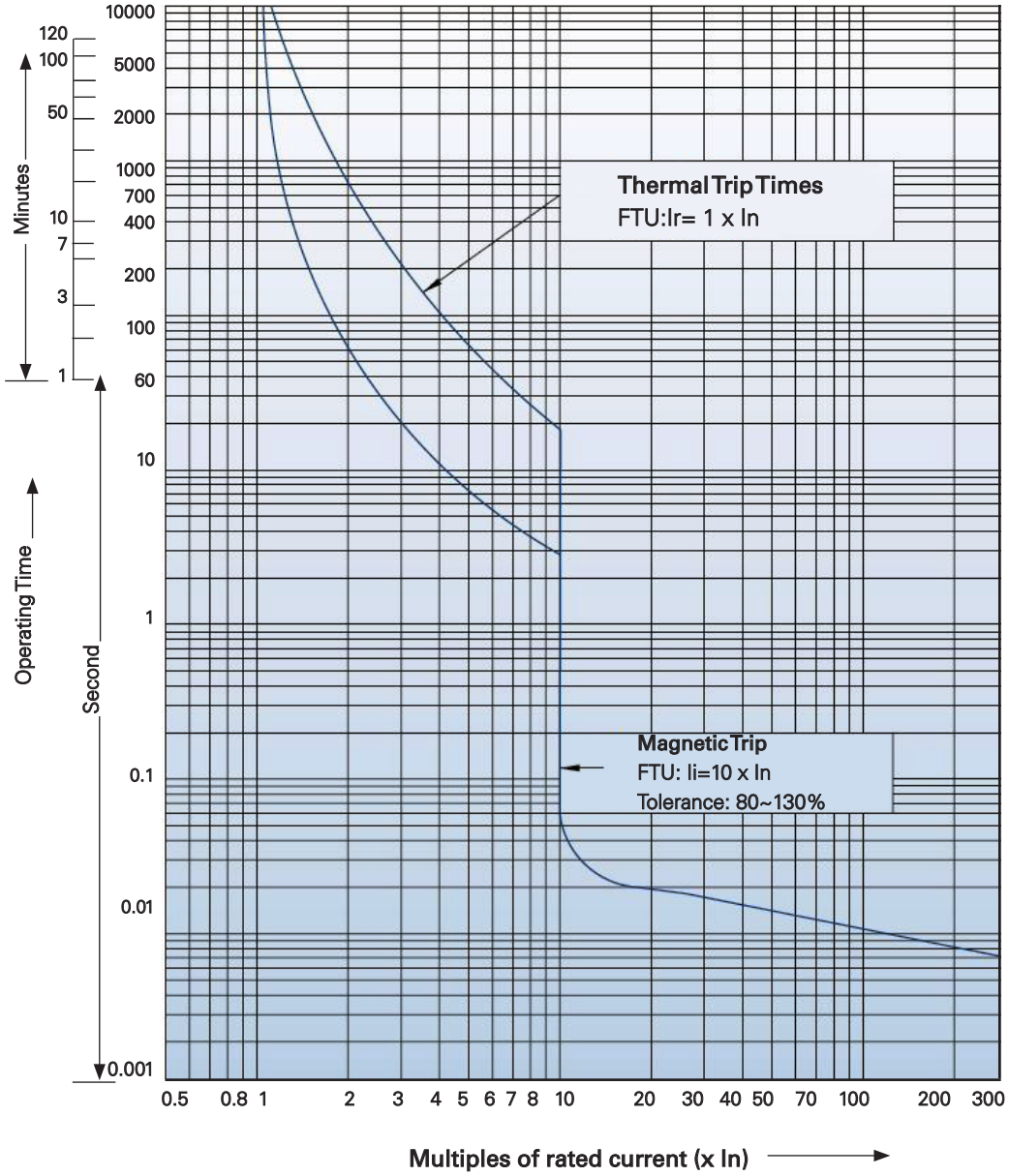

Rating	FTU	
400F	3P	Mag Trip (80%~130%)
250	•	2500A
300	•	3000A
400	•	4000A

R2CB SERIES

Molded-Case Circuit Breakers

Frame 600 Trip Curves

This curve is to be used for application and coordination purposes only.
All time/current characteristic curve data is based on 40°C ambient cold start.

600F FTU (500~600A)

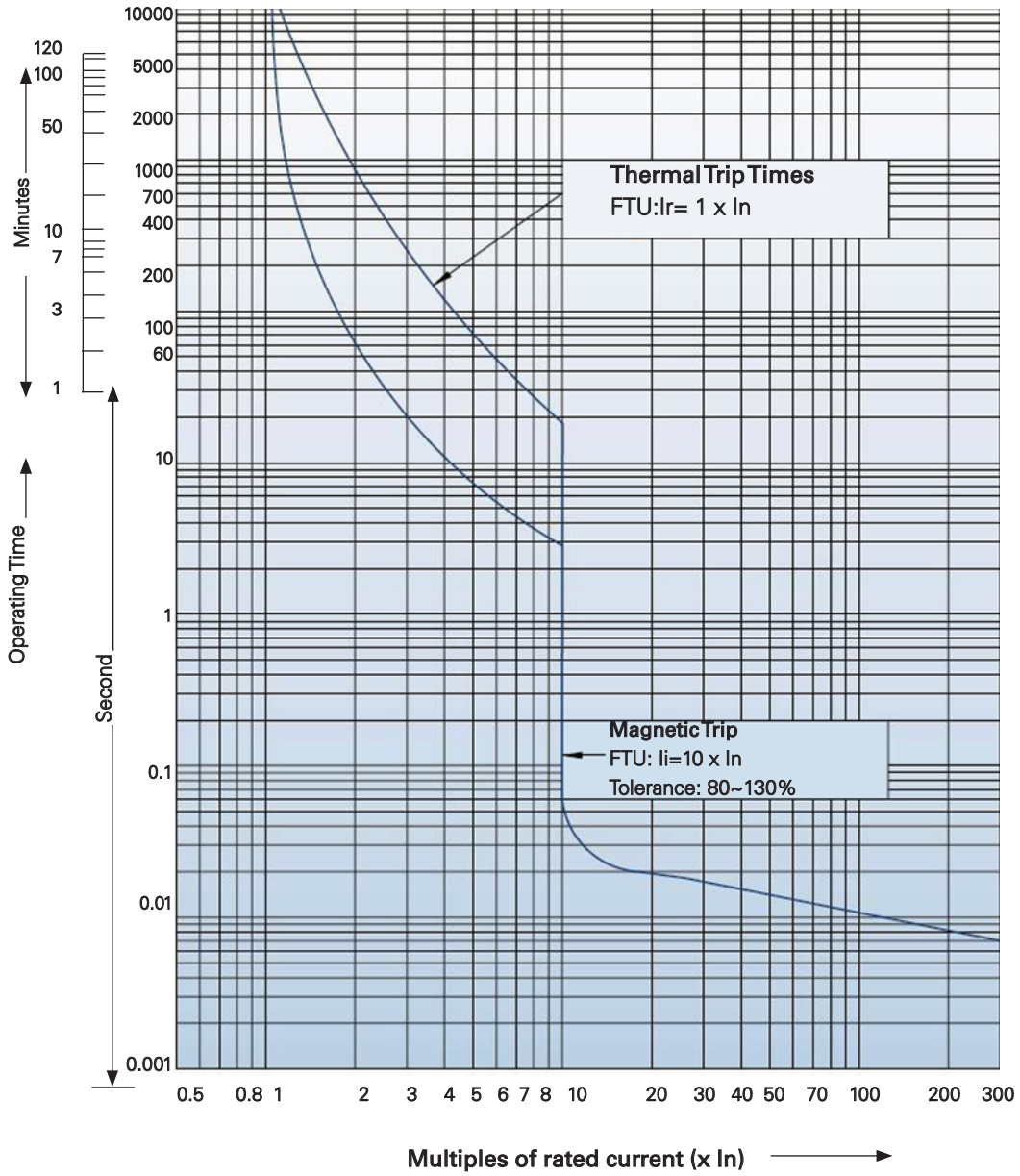

Rating	FTU	
600F	3P	Mag Trip (80%~130%)
500	•	5000A
600	•	6000A

TRIP UNITS FOR 800F AND 1200F

The 800F and 1200F frame circuit breakers include factory-installed internal trip units. Each trip unit has various protective functions as follows.

N type: Normal type

- Optimized protection function
- OCR, OCGR function according to IEC60947-2
- Overload protection
  - Long-time delay
  - Thermal
- Short-circuit protection
  - Short-time delay / instantaneous
  - I^2t On/Off optional (for short-time delay)
- Ground fault protection
  - I^2t On/Off optional
- Self-Power

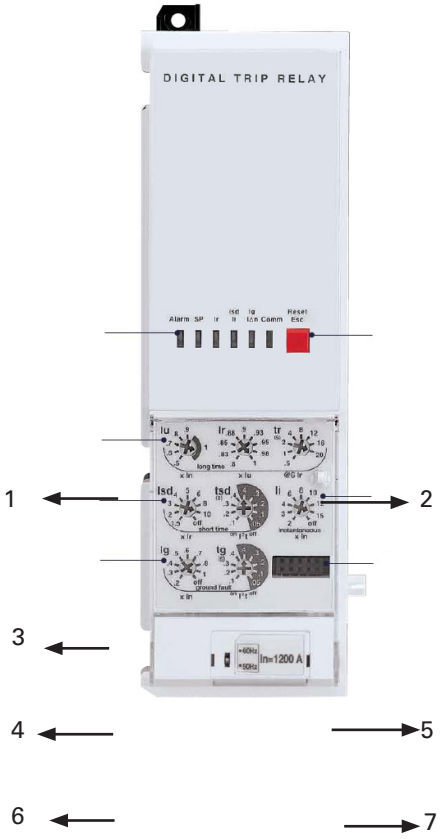

1 **LED:** Indication of trip info, and overload state

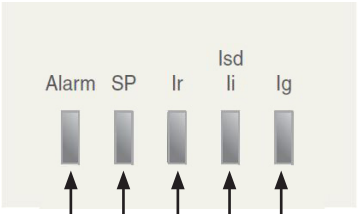

Ig: LED indicating ground-fault

Isd / Ii: LED indicating short-time or instantaneous tripping

Ir: LED indicating long-time delay

SP: Self-protection and battery test LED

Alarm: LED indicating an overload (Turn on above 90%, Blink above 105%)

2 **Reset Key**: Fault reset or battery check

3 **Iu, Ir**: Long-time current setting, **tr**: Long-time tripping delay setting

4 **Isd**: Short-time current setting, **tsd**: Short-time tripping delay setting

5 **Ii**: Instantaneous current setting

6 **Ig**: Ground fault setting, **tg**: Ground fault tripping delay setting

7 **Test Terminal**: OCR test terminal (Connected with OCR tester)

R2CB SERIES

Molded-Case Circuit Breakers

Frame 800, 1200 Trip Curves

This curve is to be used for application and coordination purposes only.

Short-Time Delay (400~1200A)

Short-time pickup 1.5~10 x Ia
and delay 0.1~0.4s

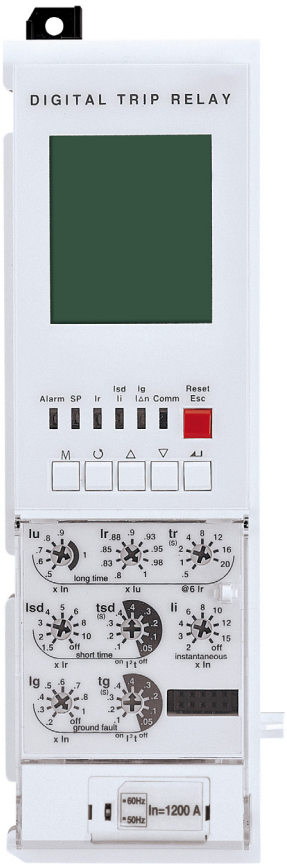

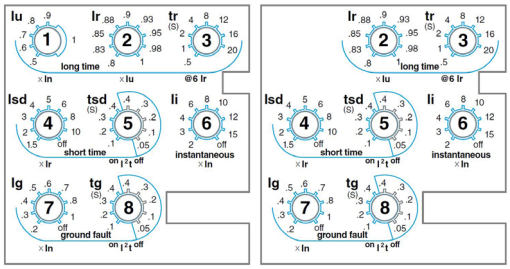

④,⑤ Short-time setting

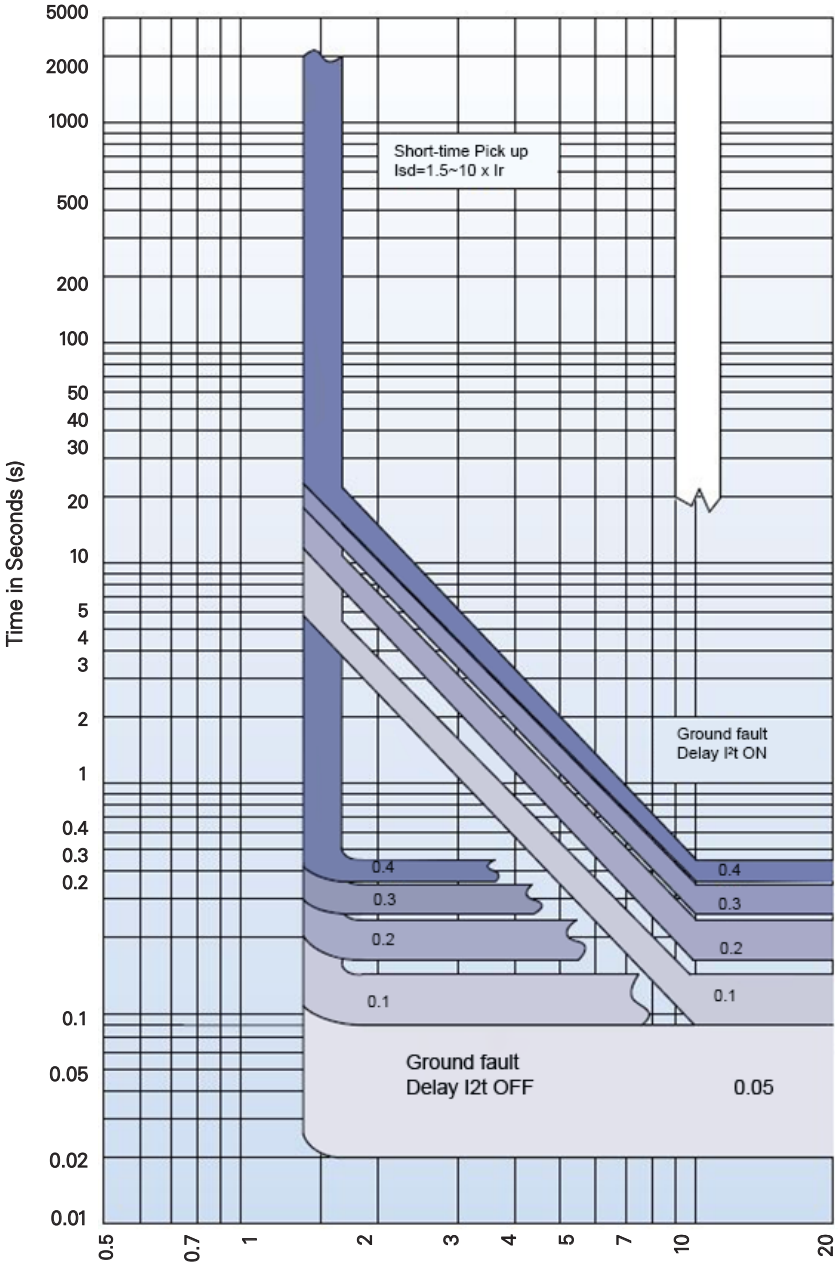

Multiples of current setting (x Ia)
(Ia=Short time setting x In)

R2CB SERIES

Molded-Case Circuit Breakers

Frame 800, 1200 Trip Curves

This curve is to be used for application and coordination purposes only.

Long-Time Delay (400~1200A)

Long-time pickup 0.4~1 x Ia and delay 0.5~20s

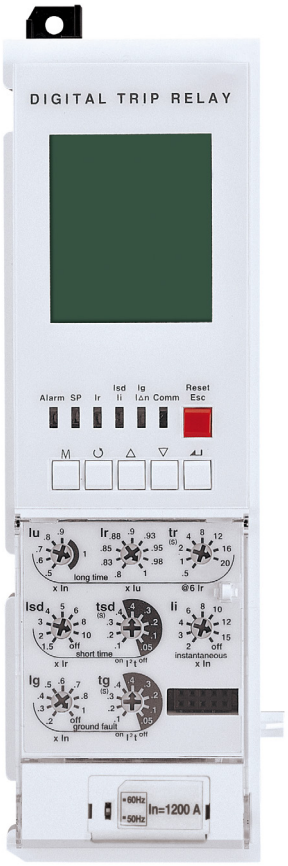

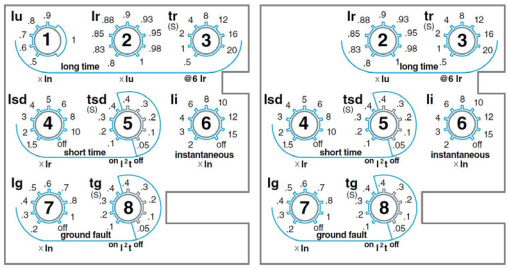

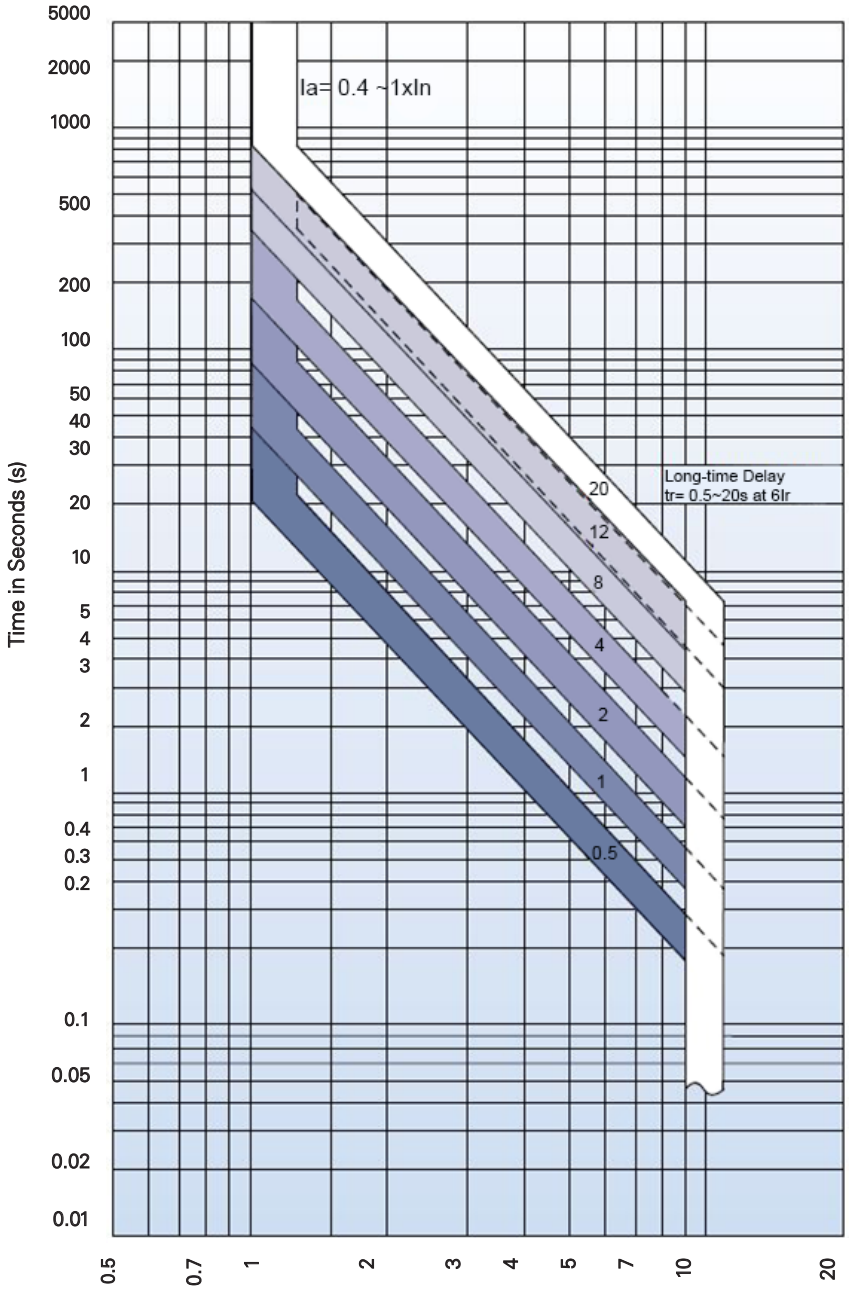

① ,② ,③ **Short-time setting**

R2CB SERIES

Molded-Case Circuit Breakers

Frame 800,1200 Trip Curves

This curve is to be used for application and coordination purposes only.

Instantaneous and Ground Fault (400~1200A)

Instantaneous pickup 2~15 x In
and Ground fault pickup 0.2~1 x In
and delay 0.1~0.4s

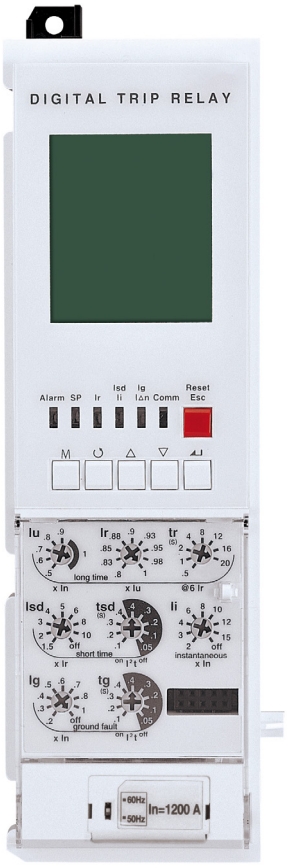

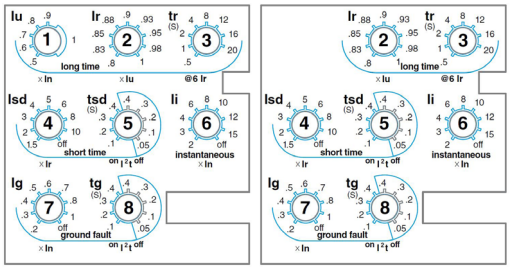

⑥,⑦, ⑧ Instantaneous and Ground fault setting

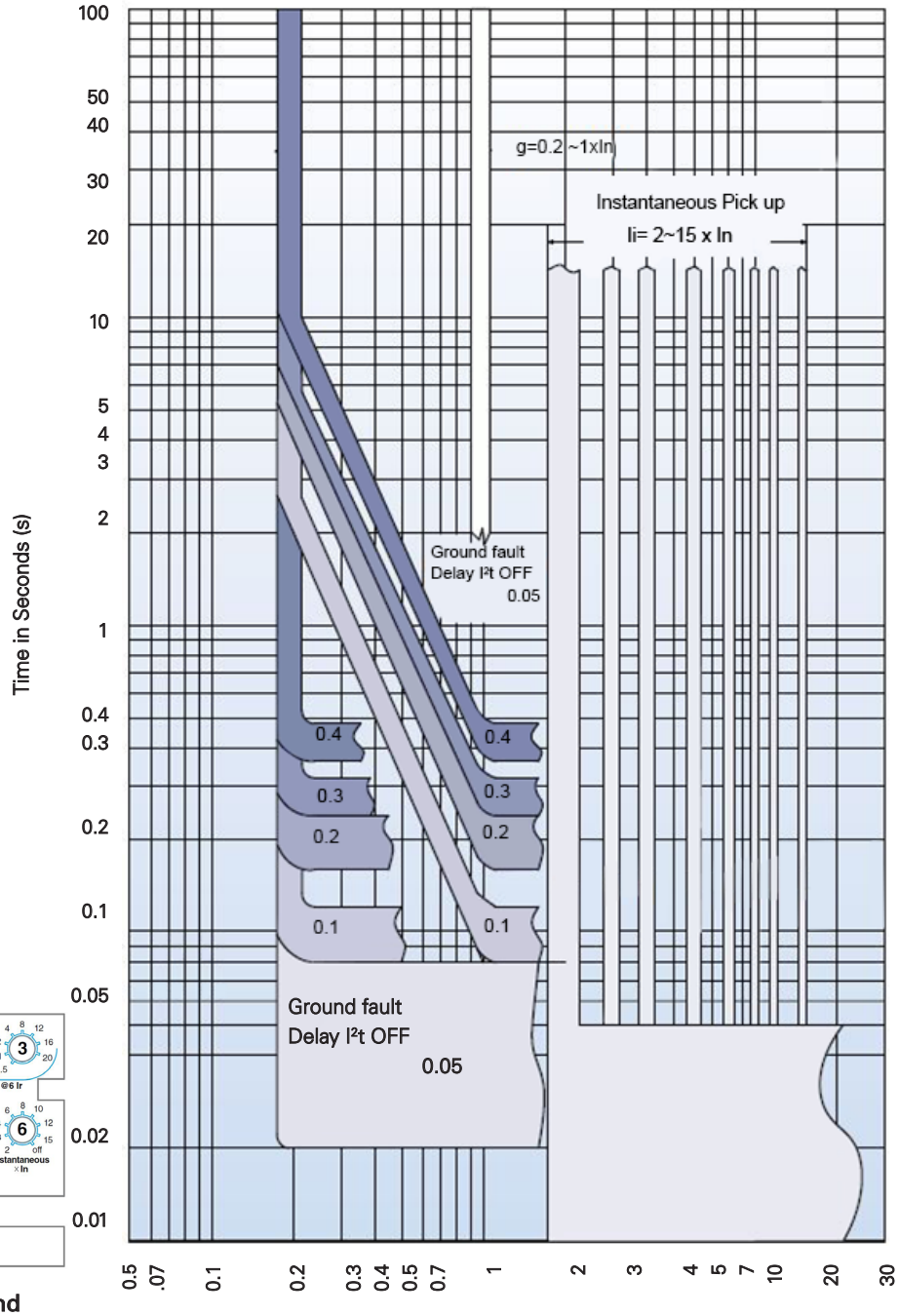

DIMENSIONS - 100F FRAME CIRCUIT BREAKERS

100F Frame 3P Circuit Breaker [Lug Type]

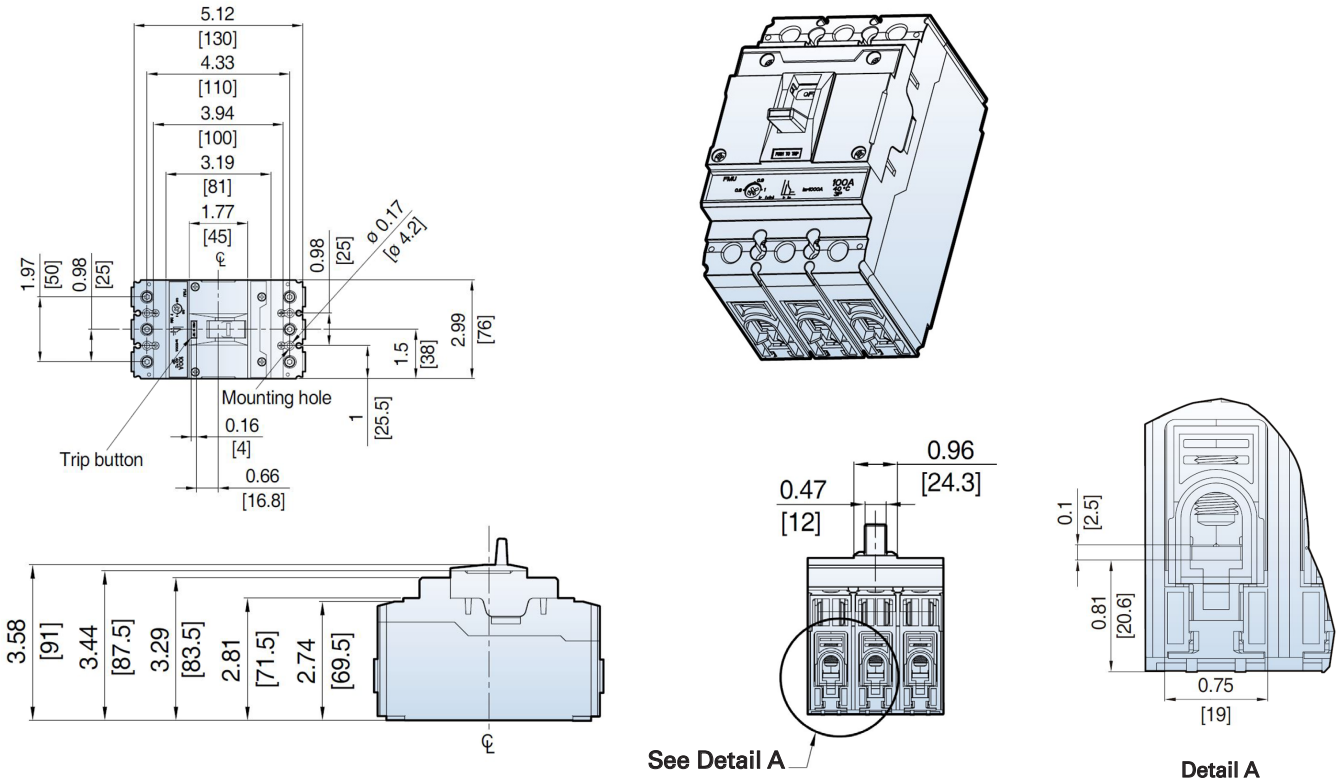

100F Frame Circuit Breaker Mounting

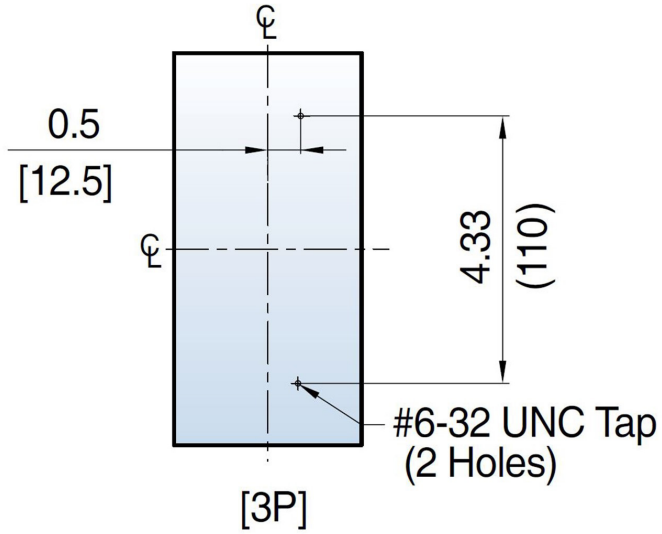

DIMENSIONS - 100F FRAME CIRCUIT BREAKERS

100F Frame Circuit Breaker Door Cutouts

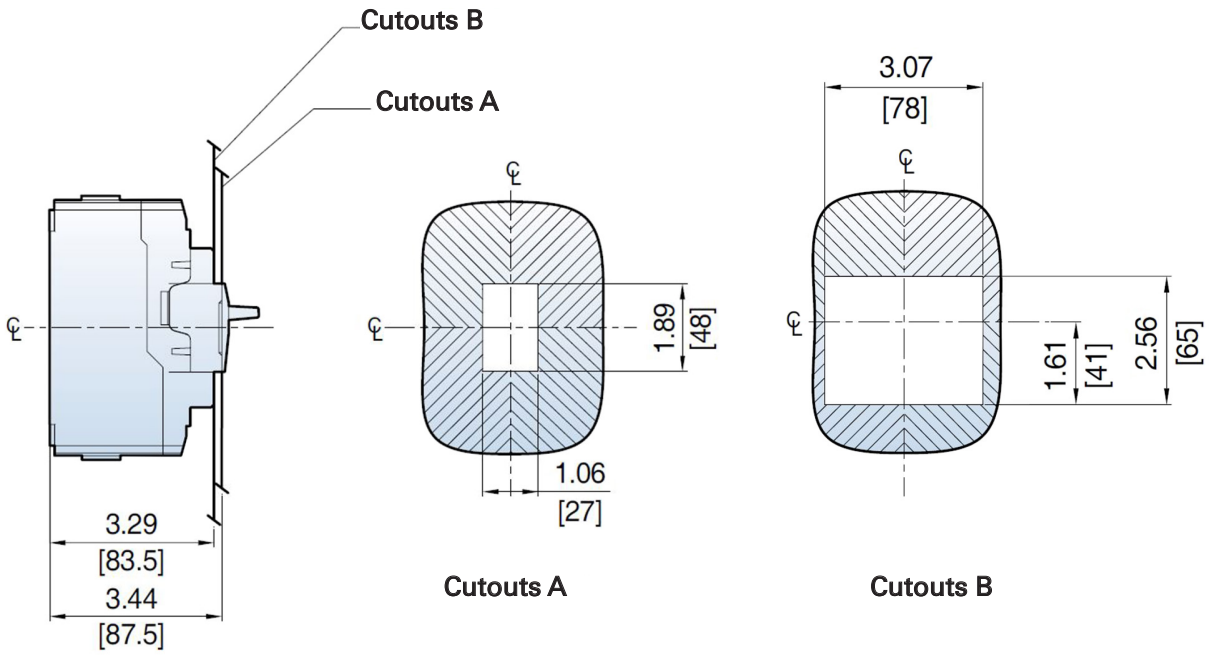

100F NEMA Door-Mounted Rotary Operating Handle R2CB-EH [V0C12, X0C12]

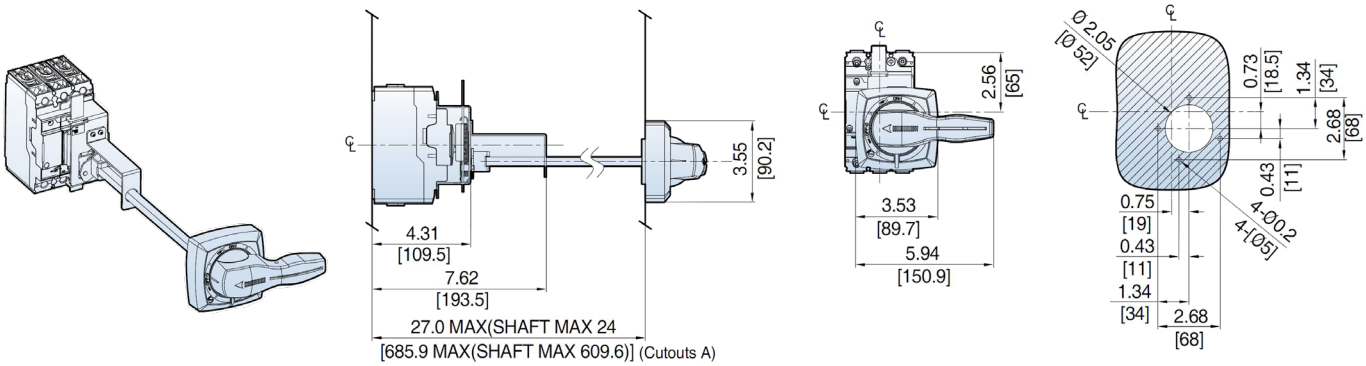

DIMENSIONS - 100F FRAME CIRCUIT BREAKERS

100F Flange-Mounted Cable Operating Handle R2CB-FH [US, XS]

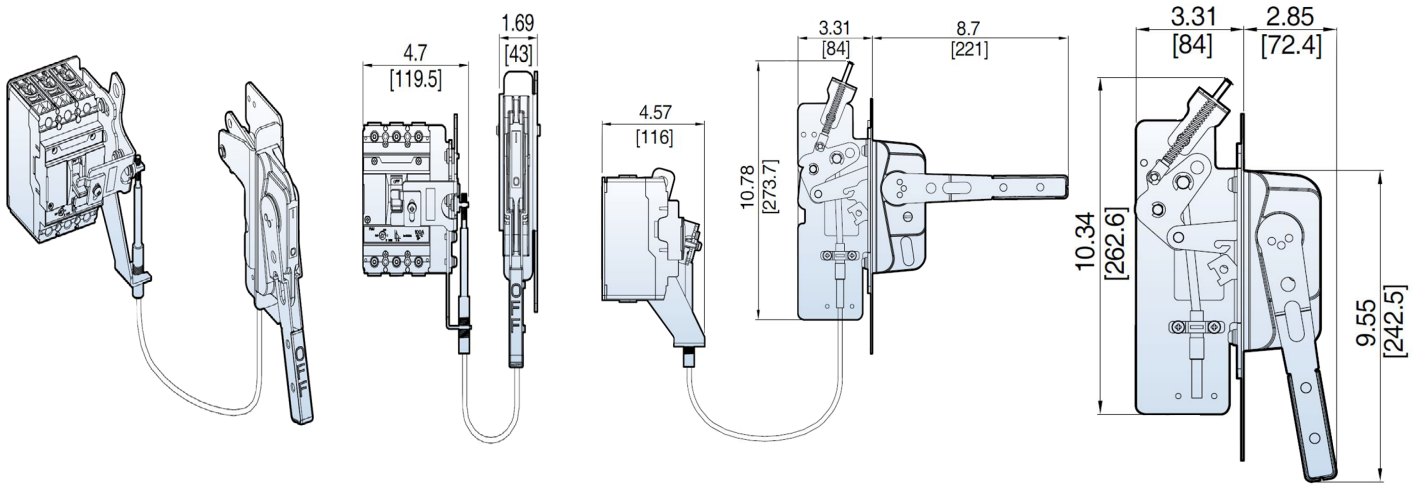

Note: Flange cable sold separately.

DIMENSIONS - 150F / 250F FRAME CIRCUIT BREAKERS

150F Frame 3P Circuit Breaker [Lug Type]

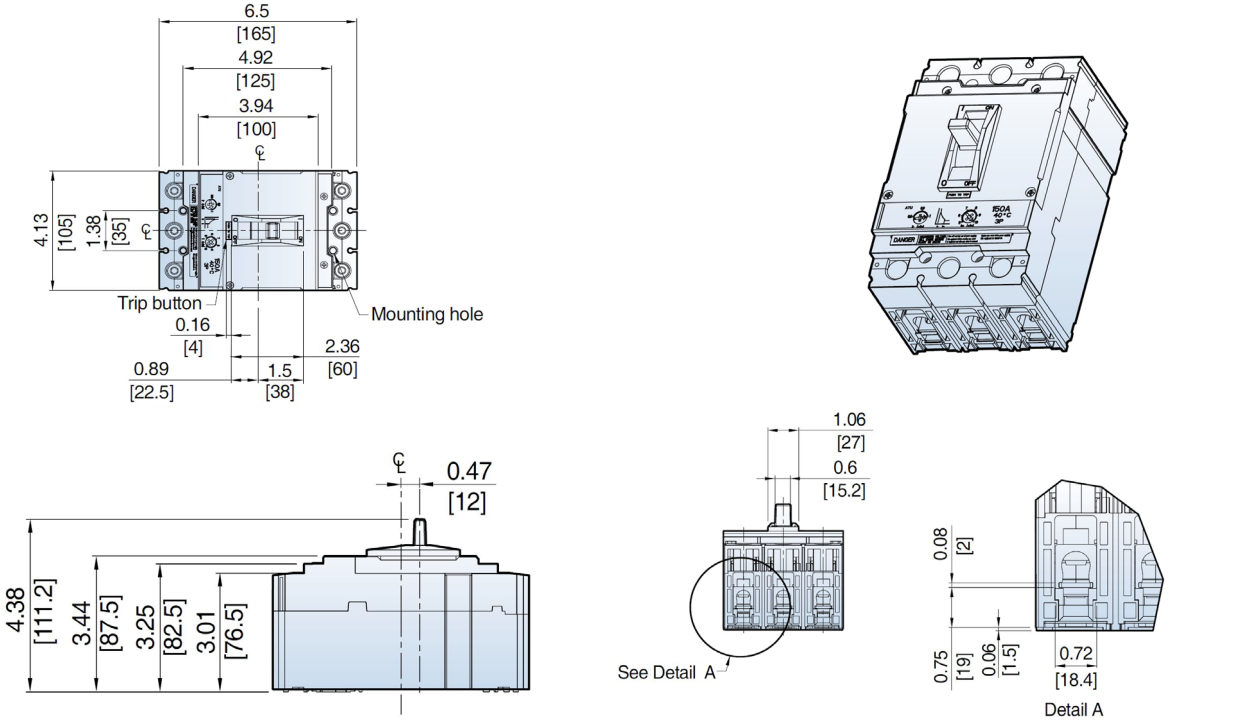

250F Frame 3P Circuit Breaker [Lug Type]

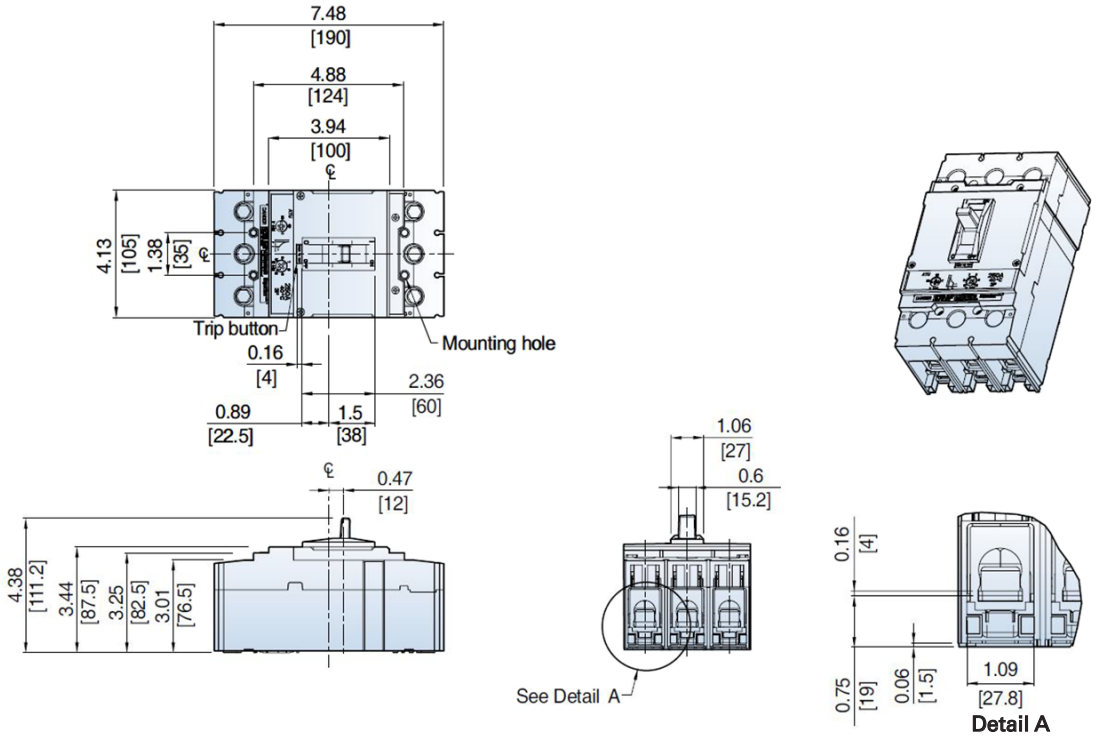

DIMENSIONS - 150F / 250F FRAME CIRCUIT BREAKERS

150F / 250F Circuit Breaker and Accessory Mounting

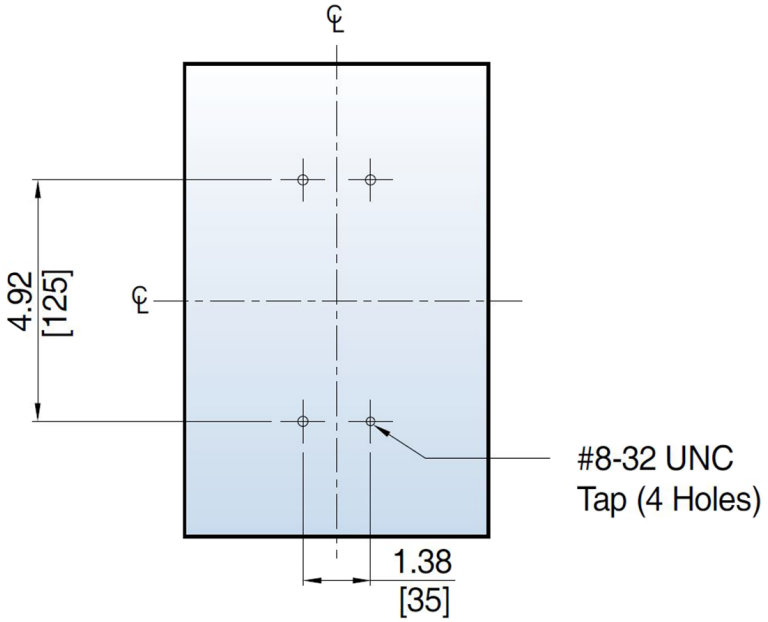

150F / 250F Circuit Breaker Door Cutouts

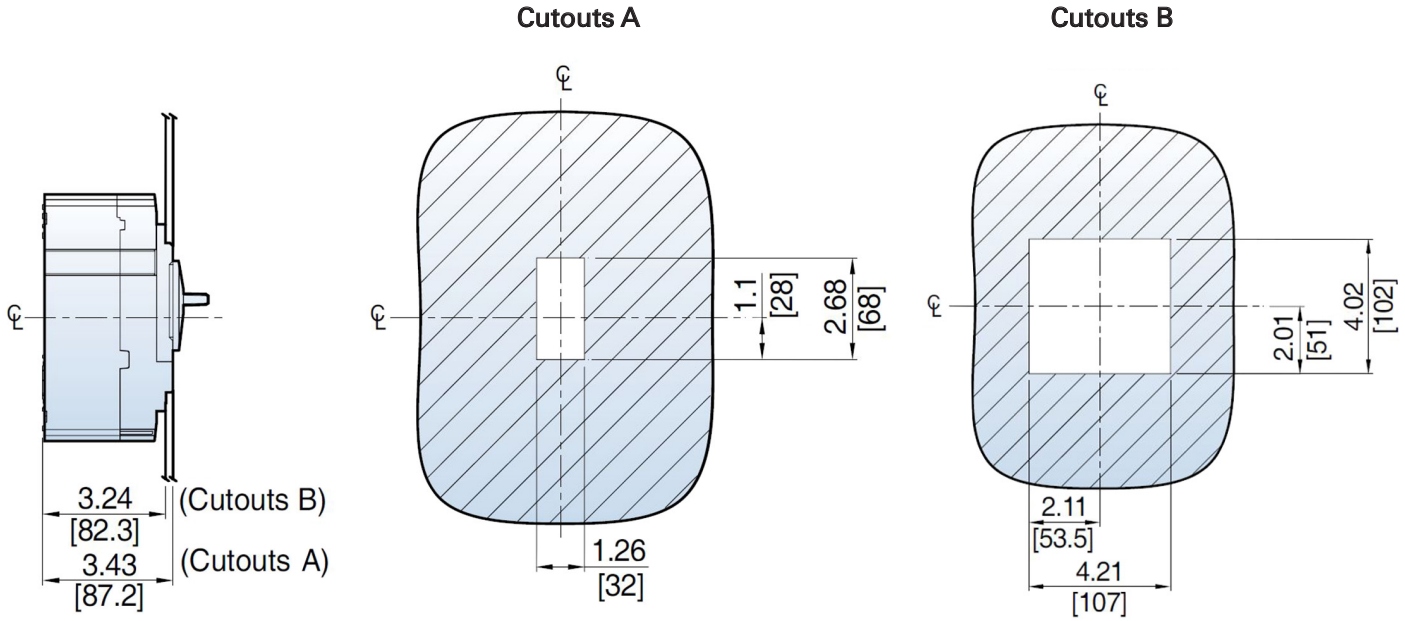

DIMENSIONS - 150F / 250F FRAME CIRCUIT BREAKERS

150F / 250F NEMA Door-Mounted Rotary Operating Handle R2CB-EH [V212, X212]

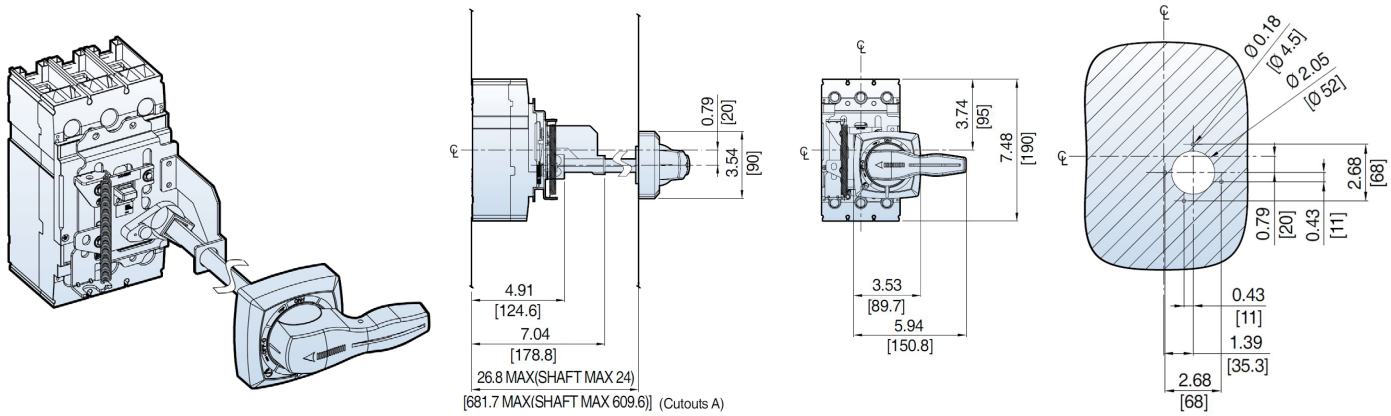

150F / 250F Flange-Mounted Cable Operating Handle R2CB-FH [U2, X2]

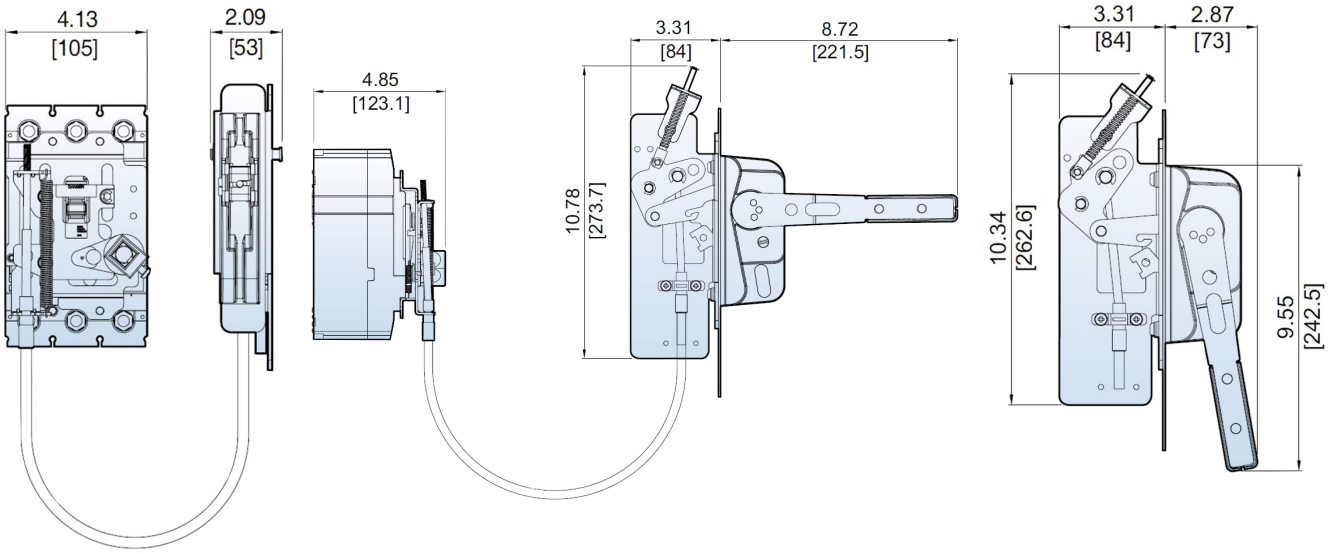

Note: Flange cable sold separately.

DIMENSIONS - 400F / 600F FRAME CIRCUIT BREAKERS

400F Frame 3P Circuit Breaker [Lug Type]

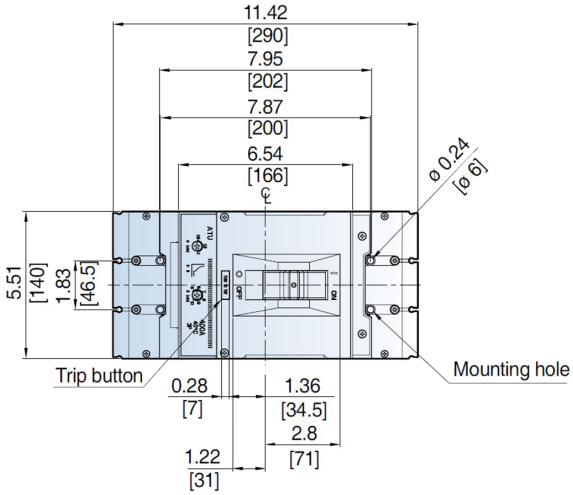

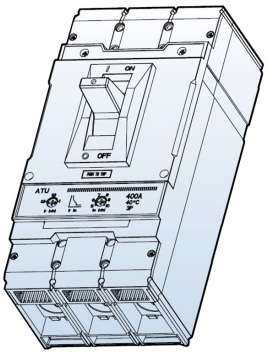

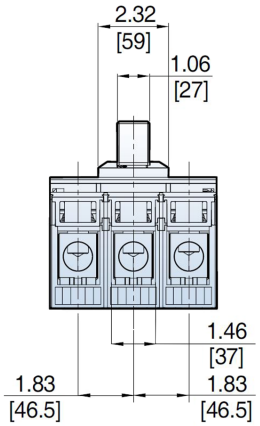

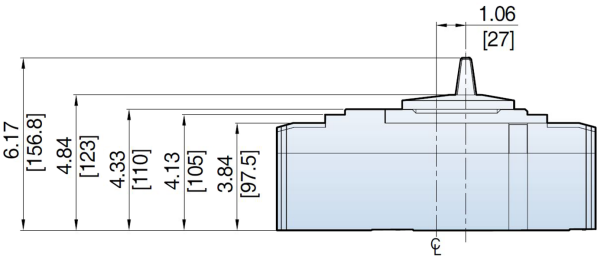

600F Frame 3P Circuit Breaker [Lug Type]

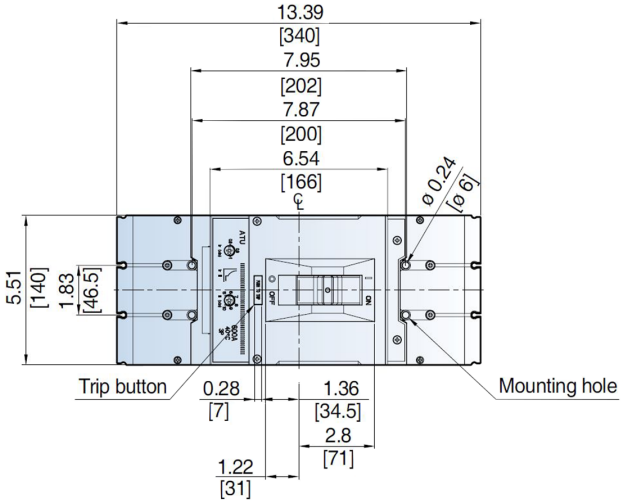

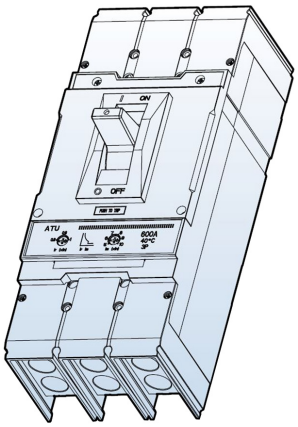

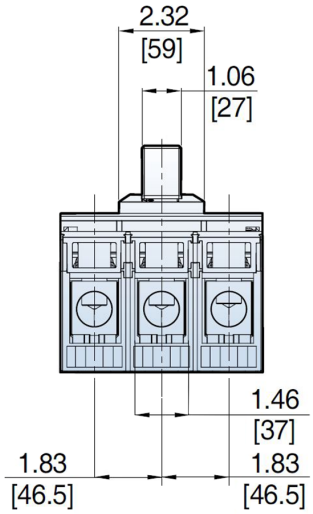

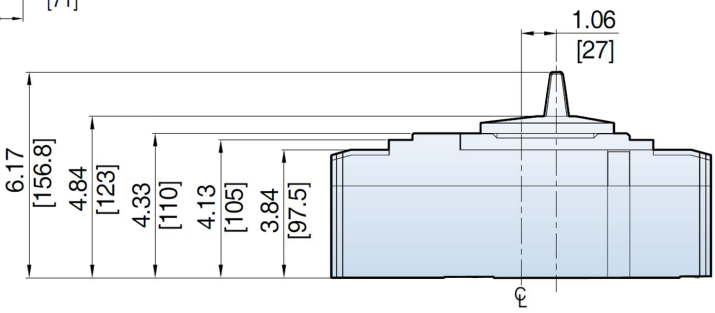

DIMENSIONS - 400F / 600F FRAME CIRCUIT BREAKERS

400F / 600F Circuit Breaker Mounting

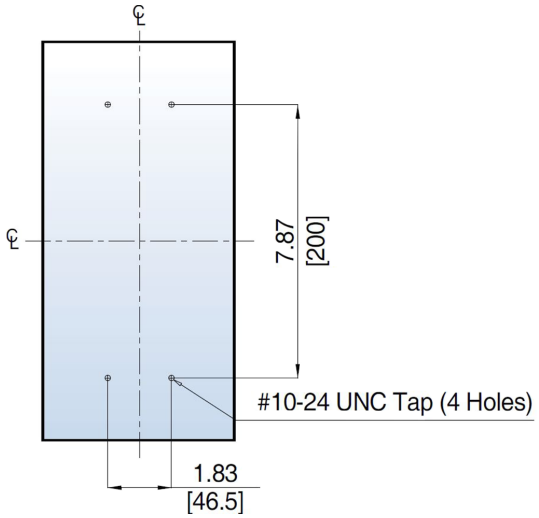

400F / 600F Circuit Breaker Door Cutouts

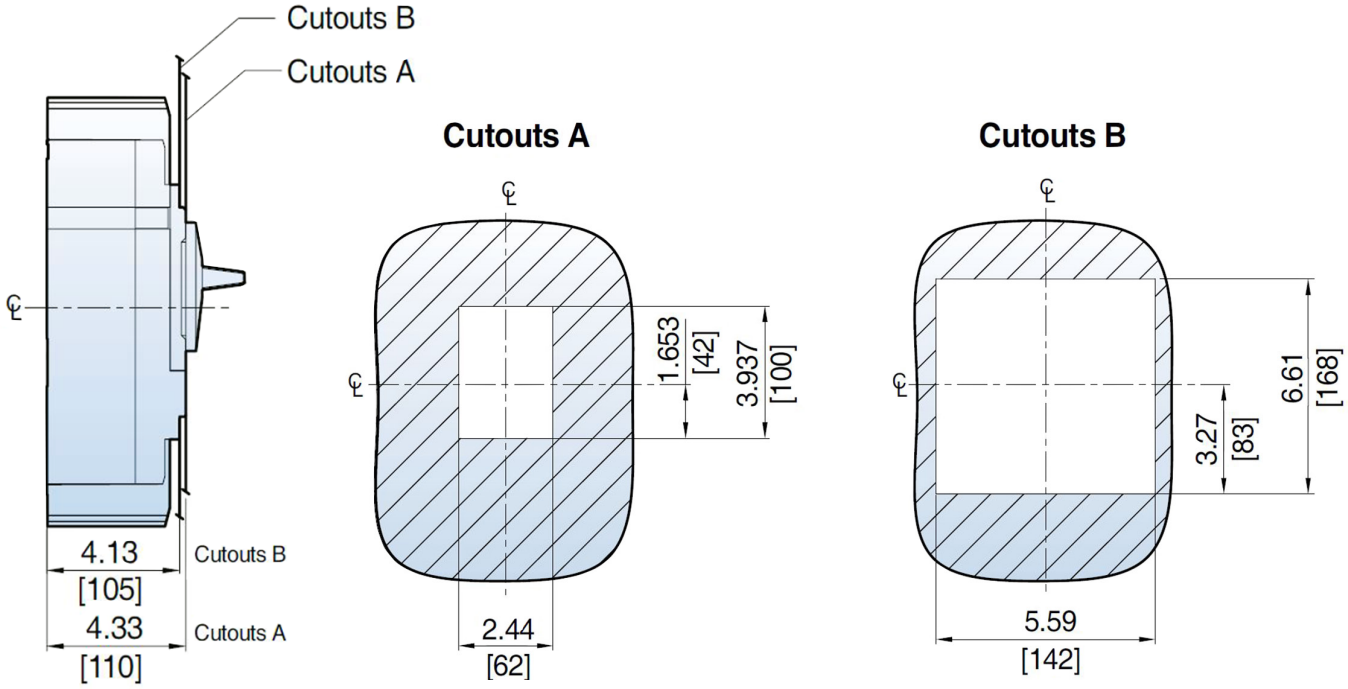

DIMENSIONS - 400F / 600F FRAME CIRCUIT BREAKERS

400F / 600F NEMA Door-Mounted Rotary Operating Handle R2CB-EH [V312, X312]

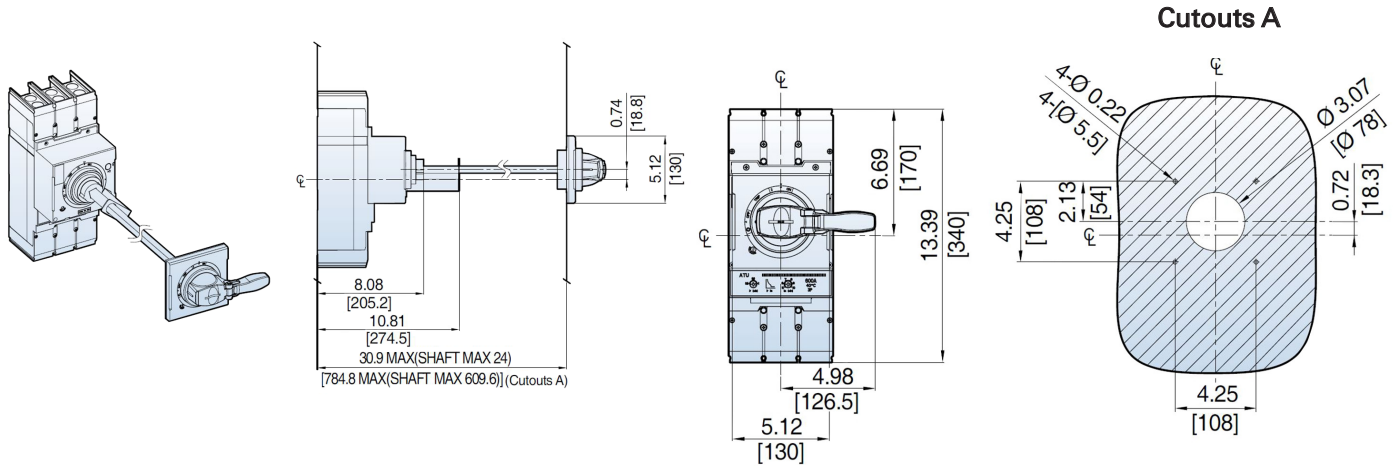

400F / 600F Flange-Mounted Cable Operating Handle R2CB-FH [U3, X3]

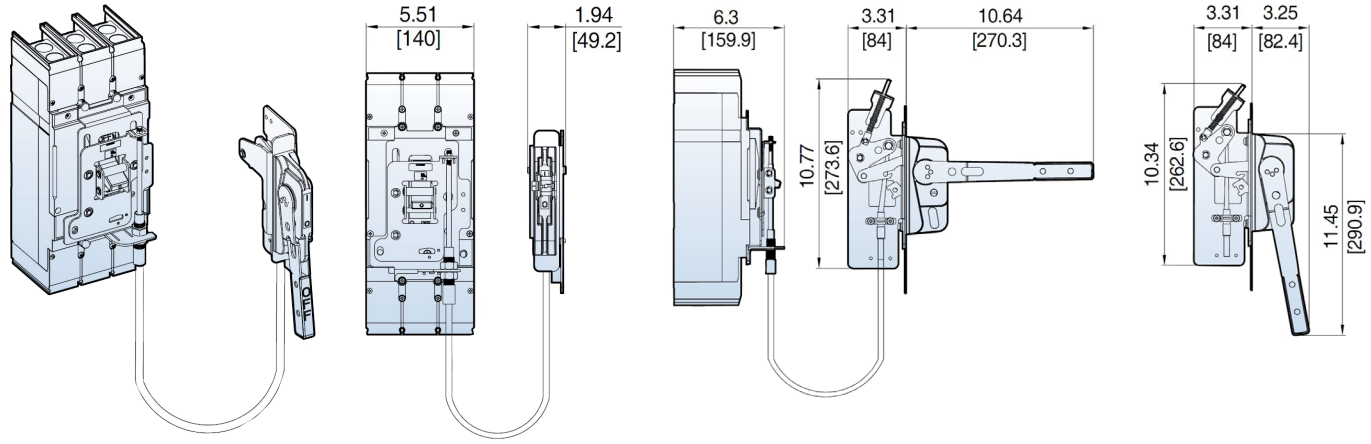

Note: Flange cable sold separately.

DIMENSIONS - 800F / 1200F FRAME CIRCUIT BREAKERS

800F Frame 3P Circuit Breaker [Lug Type]

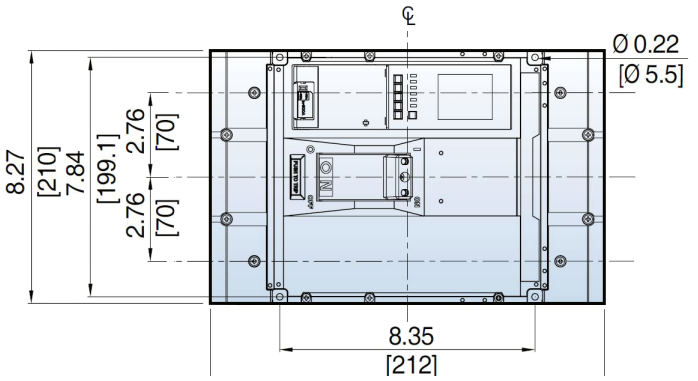

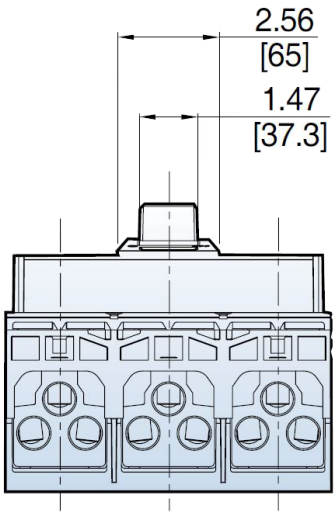

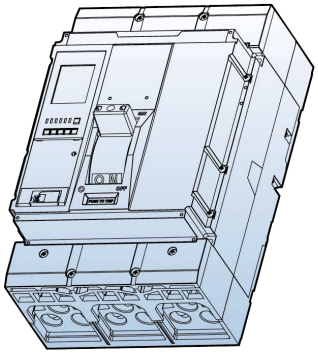

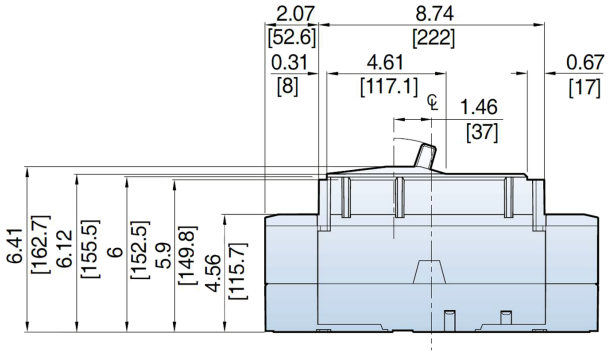

1200F Frame 3P Circuit Breaker [Lug Type]

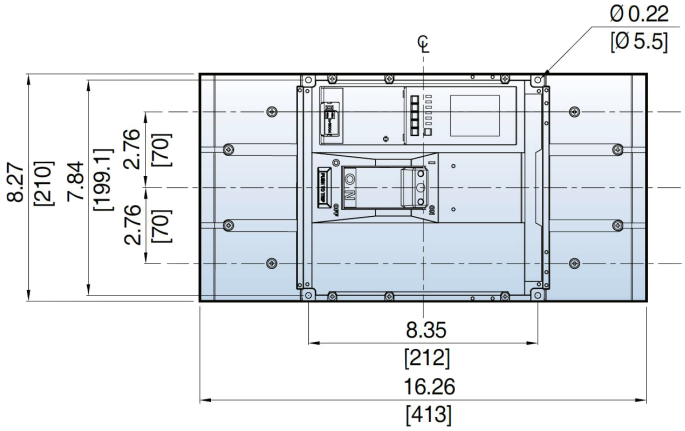

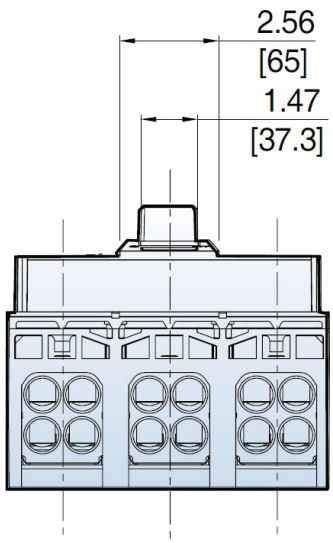

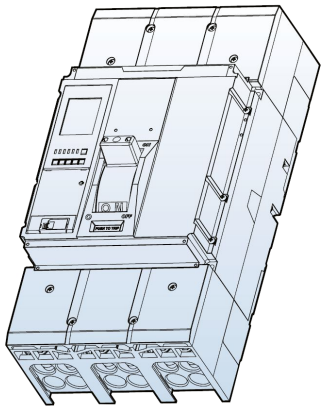

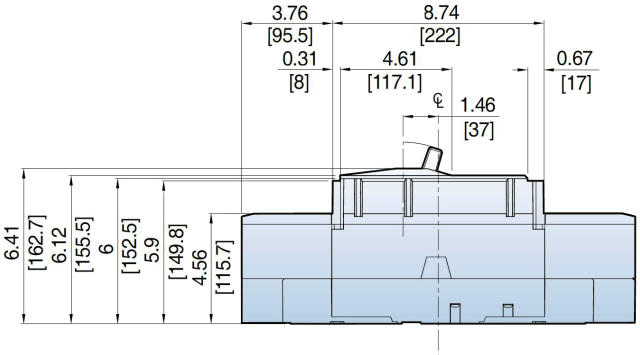

DIMENSIONS - 800F / 1200F FRAME CIRCUIT BREAKERS

800F / 1200F Circuit Breaker Mounting

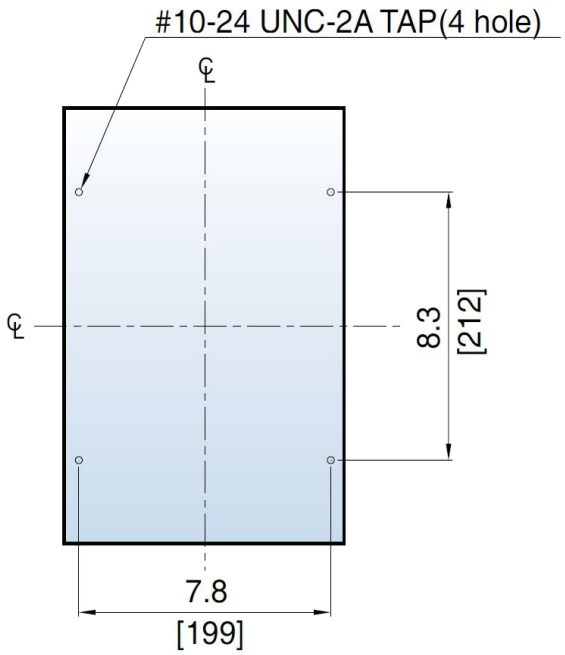

800F / 1200F Circuit Breaker Door Cutouts

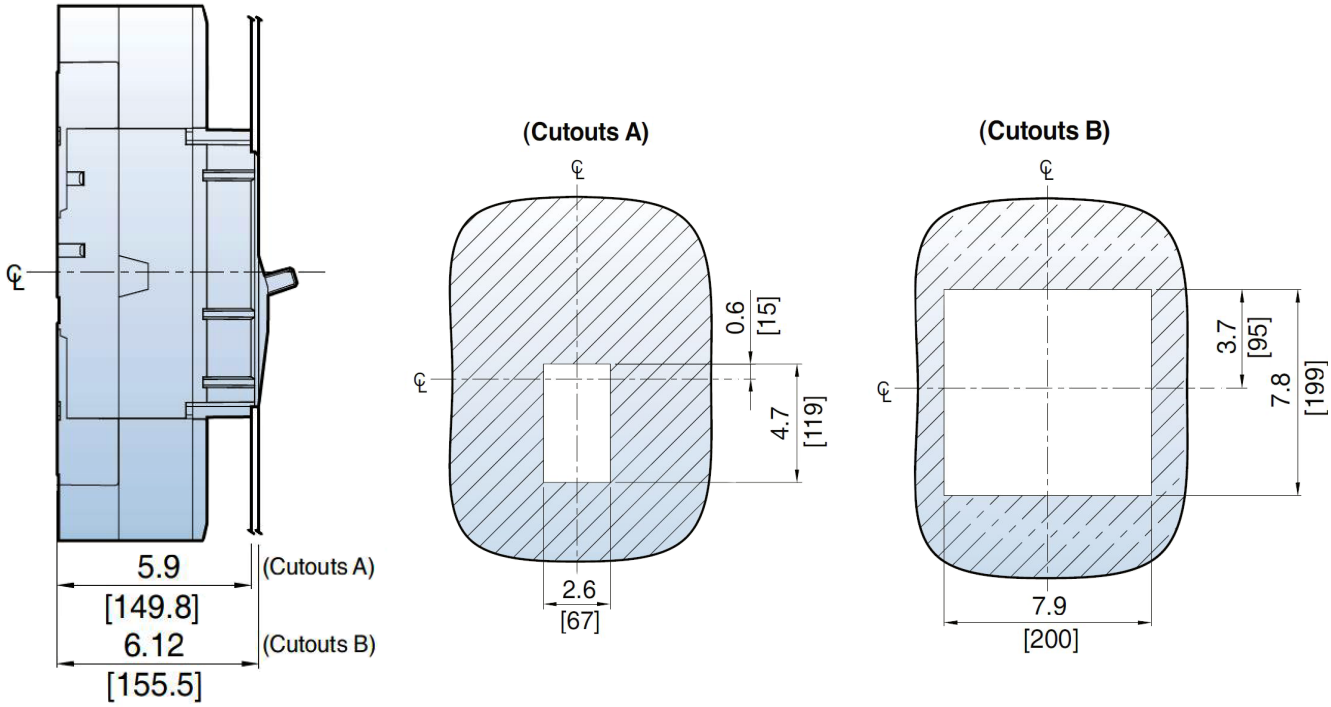

DIMENSIONS - 800F / 1200F FRAME CIRCUIT BREAKERS

800F / 1200F NEMA Door-Mounted Rotary Operating Handle R2CB-EH [V512, X512]

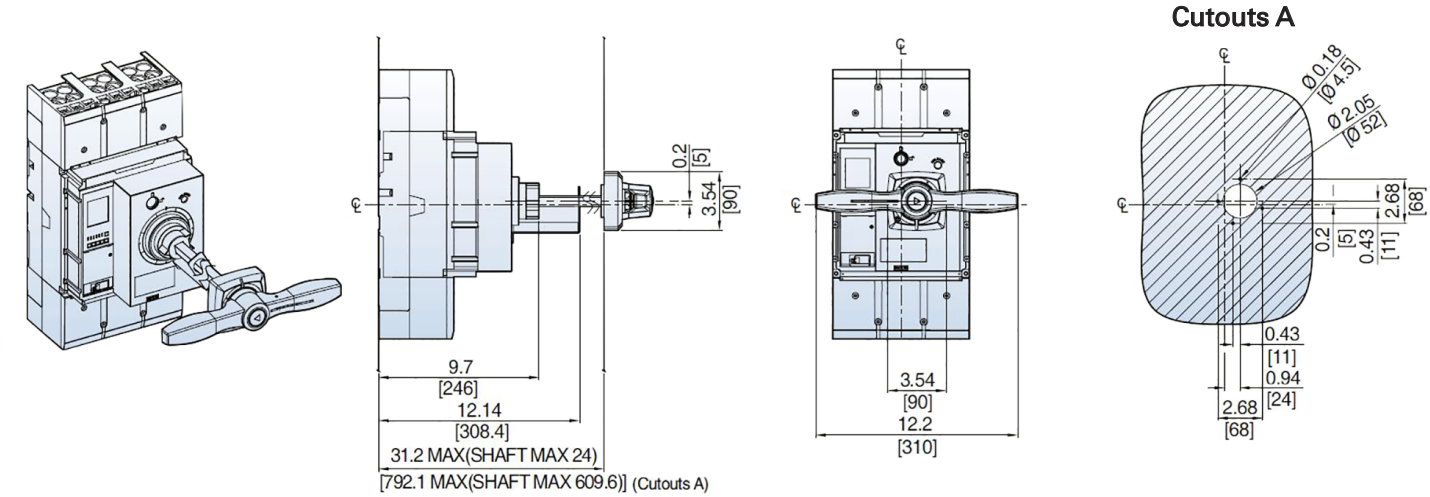

Benshaw, Inc.
615 Alpha Drive
Pittsburgh, PA 15238 United States
Toll Free: 1-800-441-8235
Phone: 412-968-0100
Fax: 412-968-5415

Benshaw Canada Controls, Inc.
550 Bright Street East
Listowel, Ontario N4W 3W3 Canada
Toll Free: 1-877-291-5112
Phone: 519-291-5112
Fax: 519-291-2595

-

Benshaw - Excel Industrial Electronics
Detroit, MI

Benshaw - Aucom Ltd.
New Zealand

Benshaw - Aucom Ltd. International
- Germany
- Dubai
- Korea

www.Benshaw.com

Specifications subject to change without notice. | Copyright © 2021 Benshaw, Inc. | All rights reserved.
CAT-15000-00-07 | Updated 07-01-2025 | Printed in the USA