DWG NO. RX2E2004803RKP

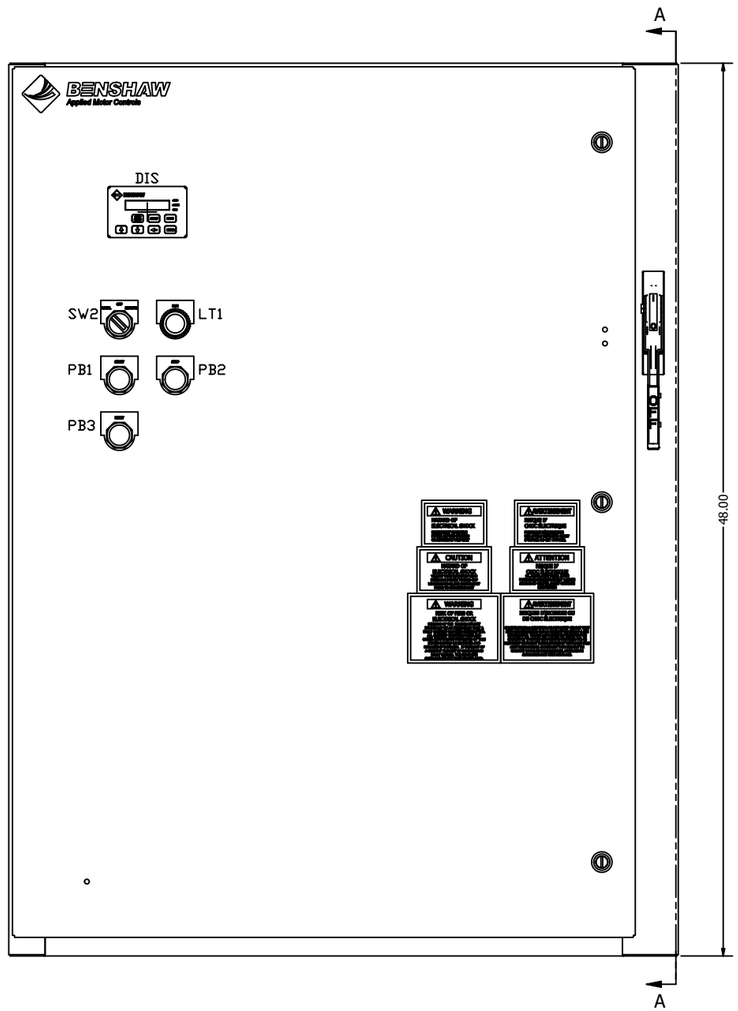

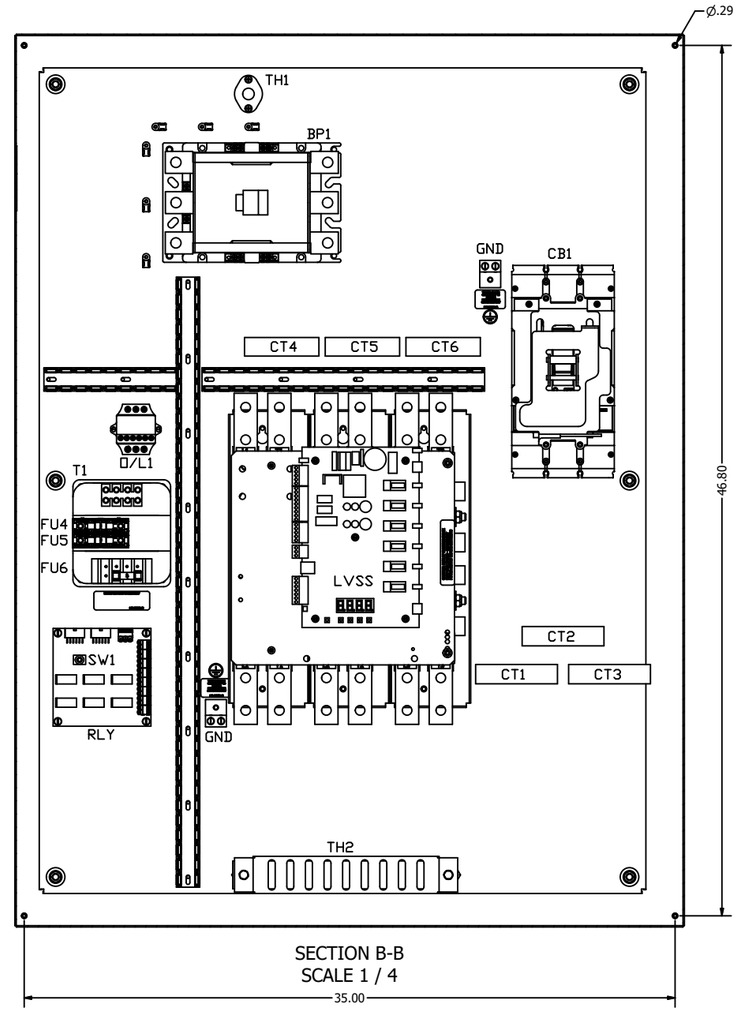

SECTION B-B
SCALE 1 / 4

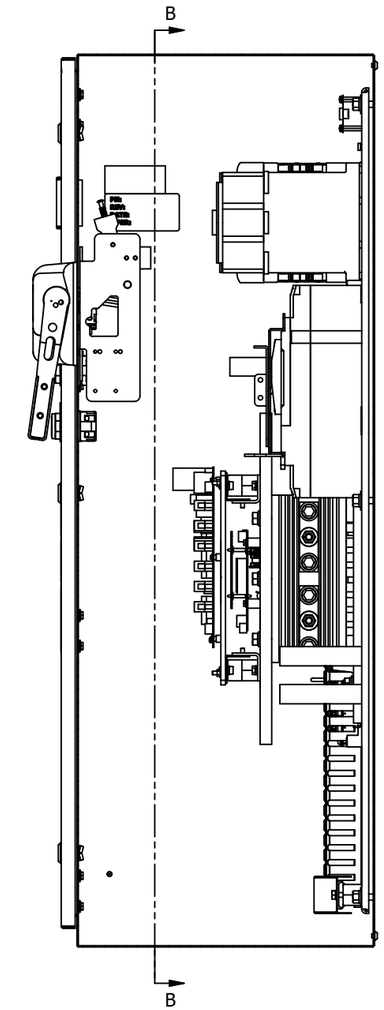

SECTION A-A
SCALE 1 / 4

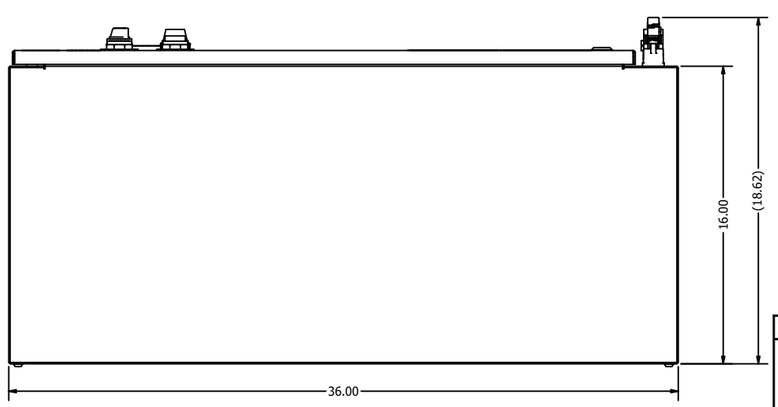

LEGEND

CB1:	CIRCUIT BREAKER	DIS:	DOOR MOUNTED KEYPAD
GND:	GROUND LUGS	PB1:	START PUSHBUTTON
LVSS:	RB2 POWER STACK	PB2:	STOP PUSHBUTTON
CT1-3:	CONTROL CARD CT'S	PB3:	RESET PUSHBUTTON
BP1:	ATL/BYPASS CONTACTOR	SW2:	LOCAL-OFF-REMOTE SEL. SWITCH
O/L1:	OVERLOAD RELAY	LT1:	RUNNING PILOT LIGHT
RLY:	SS-ATL RELAY CARD		
SW1:	SS-OFF-ATL SEL. SWITCH (RLY)		
PS1:	PINSTRIP (3 POINT)		
T1:	CONTROL POWER TRANSFORMER		
FU4-5:	PRIMARY FUSING (T1)		
FU6:	SECONDARY FUSE (T1)		
TH1:	THERMOSTAT		
TH2:	SPACE HEATER		

NOTES:

1. MINIMUM WIRE BENDING SPACE SHALL BE 10.00" FROM TOP OF CIRCUIT BREAKER POWER CONNECTION TO TOP OF ENCLOSURE.
2. ENSURE THAT ALL RIBBON CABLES ARE ROUTED AWAY FROM POWER CONDUCTORS.
3. MINIMUM WIRE BENDING SPACE SHALL BE 10.00" FROM BOTTOM OF POWERSTACK POWER CONNECTION TO BOTTOM OF ENCLOSURE.
4. ENCLOSURE LAYOUT IS DESIGNED FOR CABLE ENTRY/EXIT TO BE TOP/BOTTOM.

REV		
14	APPRD:BDA 10/14/21 CHG BY:BDA 10/14/21	CHANGE:CAHNGED CIRCUIT BREAKER AND PILOT DEVICES
13	APPRD:BDA 7/24/18 CHG BY:BDA 7/24/18	CHANGE:CHANGED TO 3VA BREAKER
12	E4105 APPRD:AES 2/25/13 CHG BY:BDA 2/25/13	CHANGE:CHANGED CUSTOMER CONNECTION DIAGRAM REPLACE CARD NUMBER SHEET 3
11	E3930 APPRD:AES 11/12/12 CHG BY:BDA 11/12/12	CHANGE:CHANGED BREAKER TO SENTRON
10	E3796 APPRD:JAF 8/14/12 CHG BY:BDA 8/14/12	CHANGE:REVISED PER WAVE PROJECT REV 10 INITIAL RELEASE

REVISIONS

DO NOT SCALE DWG

THIRD ANGLE PROJECTION

THIS DRAWING AND ALL INFORMATION CONTAINED HEREIN, IS THE PROPERTY OF BENSHAW INC., AND MAY NOT BE REPRODUCED, OR DIVULGED TO UNAUTHORIZED PERSONS WITHOUT THE EXPRESS WRITTEN CONSENT OF BENSHAW INC. IT IS PROVIDED SOLELY FOR THE CONVENIENCE OF THE USER AND SHALL BE RETURNED UPON REQUEST.

UNLESS OTHERWISE SPECIFIED
ALL DIMENSIONS IN INCHES INTERPRET DRAWING PER ASME Y14.5M-1994
TOLERANCES: .XX ± .03
.XXX ± .015
ANGLES ± 1°
MATERIAL:
FINISH:

TITLE:
ENCLOSURE LAYOUT
RX2E-200-480-3RKP
200HP (240 AMPS) @ 480V
(500% CURRENT FOR 30SECONDS, 125% CONTINUOUS DUTY RATED)

SIGNATURES		DATE
DRWN.	BDA	8/14/12
CHKD.		
ENG.	JAF	8/14/12
MFG.		

BENSHAW
615 ALPHA DRIVE
PITTSBURGH, PA. 15238
550 BRIGHT STREET
LISTOWEL, ONTARIO
N4W 3W3

SIZE D | DWG NO. RX2E2004803RKP | REV 14

SCALE: 1:4 | SHEET 1 OF 4

DWG NO. RX2E2004803RKP

BREAKER LUGS ACCEPT
WIRE SIZE RANGE: (1) 1/0–300KCMIL TIGHTENING TORQUE: 358.5LB–IN (40.5Nm)
WIRE SIZE RANGE: (1) 350–600KCMIL TIGHTENING TORQUE: 478LB–IN (54Nm)

LOAD CONNECTIONS
1.25 WIDE BUS TAB WITH TWO 0.52 DIA. HOLE FOR BOLTED CONNECTION 1.75 APPART.

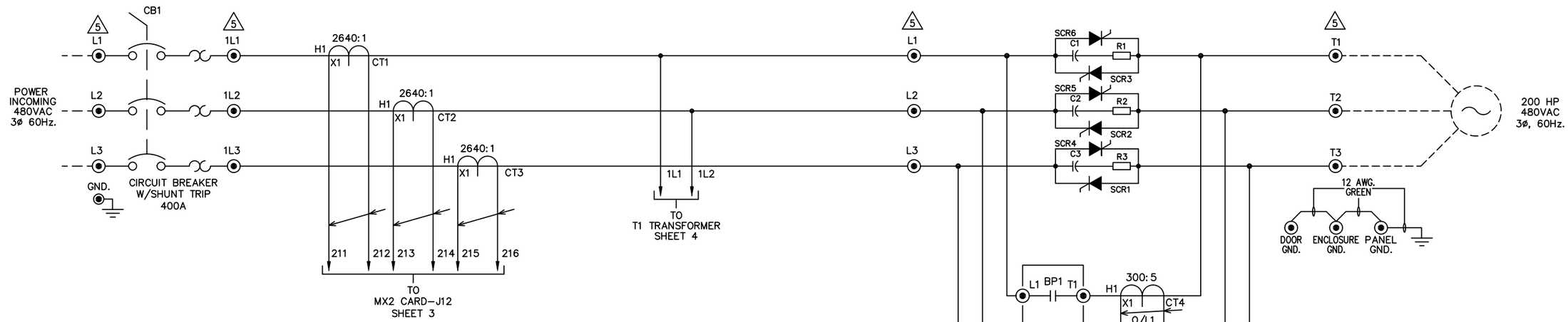

NOTES

1. FAILSAFE FAULT RELAY SHOWN IN DE–ENERGIZED STATE. RELAY WILL ENERGIZE WHEN CONTROL POWER IS APPLIED TO CONTROL CARD, AND WILL REMAIN ENERGIZED WHEN NO FAULTS ARE PRESENT. RELAY WILL DE–ENERGIZE WHEN A FAULT OCCURS, OR IF CONTROL POWER IS REMOVED FROM THE CARD
2. REFER TO INSTRUCTION MANUAL FOR STARTER CONFIGURATION.
3. CUSTOMER SHOULD MONITOR GENERAL FAULT CONTACTS OF RELAY (R3) FOR FAULT DETECTION, AND REMOVE 2 WIRE RUN COMMAND WHEN A FAULT IS DETECTED.
4. TIGHTEN CARD WIRING CONNECTIONS TO TO 2.7–3.5 in. lbs. (0.3–0.4 N–m).
5. TIGHTEN POWER LUG FIELD WIRING CONNECTIONS TO CHART 1. SPECIFICATIONS. IF BREAKER IS SUPPLIED ON LINE SIDE OF STACK USE TORQUE VALUES ON BREAKER.
6. REMOVE JUMPER WHEN INTERLOCKS ARE INSTALLED.
7. SELECT EITHER TWO OR THREE WIRE CONTROL.
8. STARTER SHIPPED SETUP FOR CUSTOMER SUPPLIED REMOTE 2 WIRE CONTROL. IF NO CONTROL IS TO BE USED THEN JUMPERS SHOULD REMAIN AS SHOWN.
9. IF CUSTOMER SUPPLIED REMOTE 3 WIRE CONTROL IS NEEDED MAKE CUSTOMER CONNECTIONS AS SHOWN.
10. CHANGE P49 (DI2) TO "FR" (FAULT RESET)
11. SW1–1: (ANALOG INPUT) UP = CURRENT, DOWN = VOLTAGE
    SW1–2: (ANALOG OUTPUT) UP = VOLTAGE, DOWN = CURRENT
12. PROGRAM (P78), FUN (03), CT RATIO = 2640:1

STANDARD LEGEND

- WIRE NODE SYMBOL MAY HAVE TERMINAL BLOCK
- BENSHAW SUPPLIED TERMINAL BLOCK
- TERMINAL STRIP
- POWER CONNECTION
- PC BOARD TERMINALS
- TWISTED PAIR
- TWISTED SHIELDED PAIR
- SHIELDED WIRE
- FIELD WIRING

CHART 1

TIGHTENING TORQUE SPECIFICATIONS FOR HEX HEAD SCREWS

BOLT SIZE SAE	BOLTS – GRADE 5 (IN. LB)	(FT. LB)
1/4	96–120	8–10
5/16	180–228	15–19
3/8	300–396	25–33
7/16	480–648	40–54
1/2	720–936	60–78

REVISIONS

DO NOT SCALE DWG

THIRD ANGLE PROJECTION

THIS DRAWING AND ALL INFORMATION CONTAINED HEREIN, IS THE PROPERTY OF BENSHAW INC., AND MAY NOT BE REPRODUCED, OR DIVULGED TO UNAUTHORIZED PERSONS WITHOUT THE EXPRESS WRITTEN CONSENT OF BENSHAW INC. IT IS PROVIDED SOLELY FOR THE CONVENIENCE OF THE USER AND SHALL BE RETURNED UPON REQUEST.

UNLESS OTHERWISE SPECIFIED
ALL DIMENSIONS IN INCHES INTERPRET DRAWING PER ASME Y14.5M–1994
TOLERANCES: .XX ± .03
.XXX ± .015
ANGLES ± 1°
MATERIAL:
FINISH:

TITLE:
POWER SCHEMATIC
RX2E–200–480–3RKP
200HP (240 AMPS) @ 480V
(500% CURRENT FOR 30SECONDS, 125% CONTINUOUS DUTY RATED)

SIGNATURES		DATE
DRWN.	BDA	8/14/12
CHKD.		
ENG.	JAF	8/14/12
MFG.		

BENSHAW

615 ALPHA DRIVE
PITTSBURGH, PA. 15238

550 BRIGHT STREET
LISTOWEL ONTARIO
N4W 3W3

SIZE D | DWG NO. RX2E2004803RKP | REV 14

SCALE: 1:1 | SHEET 2 OF 4

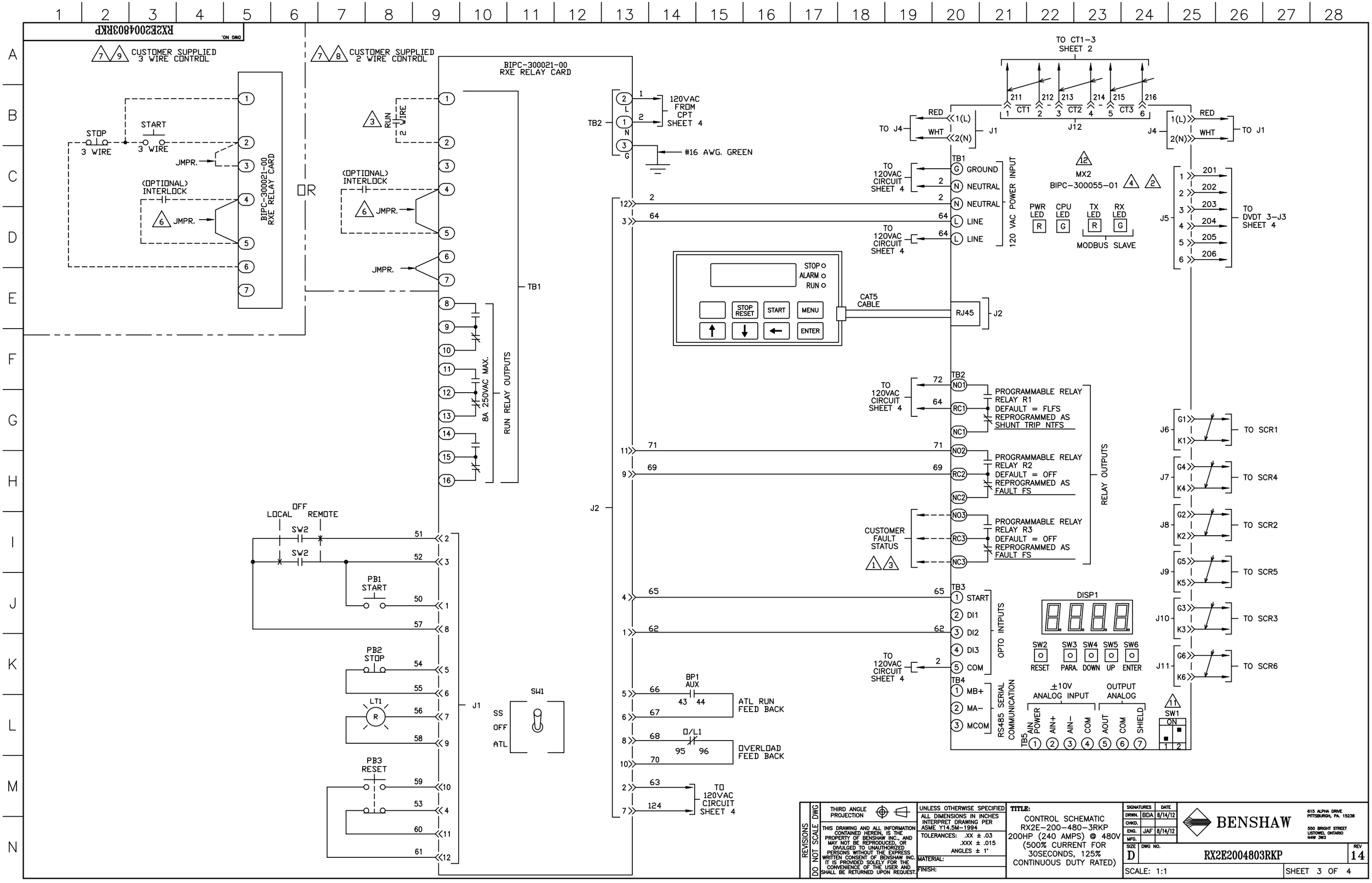
RX2E2004803RKP
DWG NO.
CUSTOMER SUPPLIED 3 WIRE CONTROL
CUSTOMER SUPPLIED 2 WIRE CONTROL
BIPC-300021-00 RXE RELAY CARD
STOP
START
3 WIRE
JMPR.
(OPTIONAL) INTERLOCK
OR
RUN 2 WIRE
TB1
TB2
120VAC FROM CPT SHEET 4
#16 AWG. GREEN
8A 250VAC MAX.
RUN RELAY OUTPUTS
TO CT1-3 SHEET 2
CT1
CT2
CT3
J12
J1
J4
RED
WHT
TO J4
TO J1
TO 120VAC CIRCUIT SHEET 4
GROUND
NEUTRAL
LINE
120 VAC POWER INPUT
MX2
BIPC-300055-01
PWR LED
CPU LED
TX LED
RX LED
MODBUS SLAVE
J5
TO DVDT 3-J3 SHEET 4
STOP
ALARM
RUN
STOP RESET
START
MENU
ENTER
CAT5 CABLE
RJ45
J2
PROGRAMMABLE RELAY RELAY R1 DEFAULT = FLFS REPROGRAMMED AS SHUNT TRIP NTFS
PROGRAMMABLE RELAY RELAY R2 DEFAULT = OFF REPROGRAMMED AS FAULT FS
PROGRAMMABLE RELAY RELAY R3 DEFAULT = OFF REPROGRAMMED AS FAULT FS
RELAY OUTPUTS
CUSTOMER FAULT STATUS
J6
J7
J8
J9
J10
J11
TO SCR1
TO SCR4
TO SCR2
TO SCR5
TO SCR3
TO SCR6
OFF
LOCAL
REMOTE
SW2
PB1 START
PB2 STOP
LT1
PB3 RESET
J1
SW1
SS
OFF
ATL
BP1 AUX
ATL RUN FEED BACK
O/L1
OVERLOAD FEED BACK
TO 120VAC CIRCUIT SHEET 4
START
DI1
DI2
DI3
COM
OPTO INPUTS
MB+
MA-
MCOM
RS485 SERIAL COMMUNICATION
DISP1
SW2 RESET
SW3 PARA.
SW4 DOWN
SW5 UP
SW6 ENTER
±10V ANALOG INPUT
OUTPUT ANALOG
AIN POWER
AIN+
AIN-
COM
AOUT
COM
SHIELD
SW1
ON
REVISIONS
DO NOT SCALE DWG
THIRD ANGLE PROJECTION
THIS DRAWING AND ALL INFORMATION CONTAINED HEREIN, IS THE PROPERTY OF BENSHAW INC., AND MAY NOT BE REPRODUCED, OR DIVULGED TO UNAUTHORIZED PERSONS WITHOUT THE EXPRESS WRITTEN CONSENT OF BENSHAW INC. IT IS PROVIDED SOLELY FOR THE CONVENIENCE OF THE USER AND SHALL BE RETURNED UPON REQUEST.
UNLESS OTHERWISE SPECIFIED ALL DIMENSIONS IN INCHES INTERPRET DRAWING PER ASME Y14.5M-1994
TOLERANCES: .XX ± .03 .XXX ± .015 ANGLES ± 1°
MATERIAL:
FINISH:
TITLE:
CONTROL SCHEMATIC RX2E-200-480-3RKP 200HP (240 AMPS) @ 480V (500% CURRENT FOR 30SECONDS, 125% CONTINUOUS DUTY RATED)
SIGNATURES DATE
DRWN. BDA 8/14/12
CHKD.
ENG. JAF 8/14/12
MFG.
BENSHAW
615 ALPHA DRIVE PITTSBURGH, PA. 15238
550 BRIGHT STREET LISTOWEL, ONTARIO N4W 3W3
SIZE D
DWG NO. RX2E2004803RKP
REV 14
SCALE: 1:1
SHEET 3 OF 4

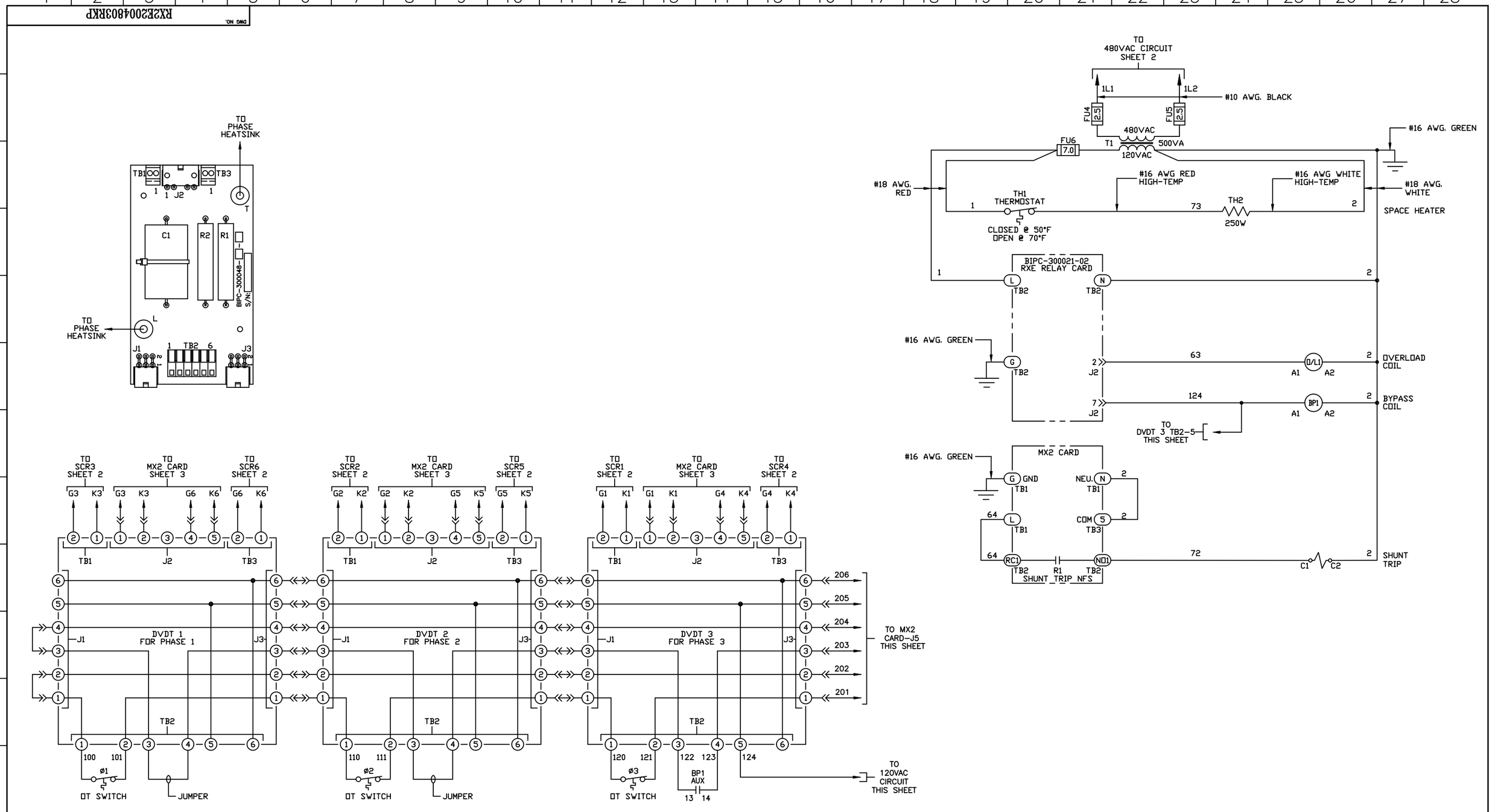

REVISIONS	DO NOT SCALE DWG	THIRD ANGLE PROJECTION	UNLESS OTHERWISE SPECIFIED ALL DIMENSIONS IN INCHES INTERPRET DRAWING PER ASME Y14.5M-1994 TOLERANCES: .XX ± .03 .XXX ± .015 ANGLES ± 1°	TITLE: CONTROL SCHEMATIC RX2E-200-480-3RKP 200HP (240 AMPS) @ 480V (500% CURRENT FOR 30SECONDS, 125% CONTINUOUS DUTY RATED)	SIGNATURES / DATE DRWN. BDA 8/14/12 CHKD. ENG. JAF 8/14/12 MFG.

THIS DRAWING AND ALL INFORMATION CONTAINED HEREIN, IS THE PROPERTY OF BENSHAW INC., AND MAY NOT BE REPRODUCED, OR DIVULGED TO UNAUTHORIZED PERSONS WITHOUT THE EXPRESS WRITTEN CONSENT OF BENSHAW INC. IT IS PROVIDED SOLELY FOR THE CONVENIENCE OF THE USER AND SHALL BE RETURNED UPON REQUEST.

MATERIAL:
FINISH:

BENSHAW
615 ALPHA DRIVE
PITTSBURGH, PA. 15238
550 BRIGHT STREET
LISTOWEL ONTARIO
N4W 3W3

SIZE D | DWG NO. RX2E2004803RKP | REV 14

SCALE: 1:1 | SHEET 4 OF 4