BENSHAW
Applied Motor Controls

List Price Sheets

May 2022 Edition

Pilot Devices

Rapid | Rugged | Global

PUSH BUTTONS (30mm) - PRICING

WEB STOCKED

Benshaw's line of 30mm push buttons are durable, flexible, and ideal for a variety of uses. Available in two versions (non-illuminated and illuminated), these push buttons can be customized to suit your needs. All of our push buttons are UL listed and rated NEMA 4X for use in even harsh environments.

- UL listed
- NEMA RATING: 1, 2, 3, 3R, 12, 13, 4, 4X

Fully-assembled operators come standard with one 3/16" (4.8mm) and three 1/16" (1.6mm) gaskets.

Non-Illuminated Push Buttons

Momentary

	Part Number	Color	Contacts	Type	Rating Type	List Price
Flush	R2PB30-F-K-O	Black	1 N.O.	Flush	4/4X	$26
	R2PB30-F-G-O	Green	1 N.O.	Flush	4/4X	$26
	R2PB30-F-R-O	Red	1 N.O.	Flush	4/4X	$26
	R2PB30-F-R-C	Red	1 N.C.	Flush	4/4X	$26
	R2PB30-F-Y-O	Yellow	1 N.O.	Flush	4/4X	$26
	R2PB30-G-K-O	Black	1 N.O.	Flush	4/4X	$30
Guarded	R2PB30-G-G-O	Green	1 N.O.	Guarded	4/4X	$30
	R2PB30-G-R-O	Red	1 N.O.	Guarded	4/4X	$30
	R2PB30-G-R-C	Red	1 N.C.	Guarded	4/4X	$30
	R2PB30-G-Y-O	Yellow	1 N.O.	Guarded	4/4X	$30
Extended	R2PB30-E-K-O	Black	1 N.O.	Extended	4/4X	$26
	R2PB30-E-G-O	Green	1 N.O.	Extended	4/4X	$26
	R2PB30-E-R-O	Red	1 N.O.	Extended	4/4X	$26
	R2PB30-E-R-C	Red	1 N.C.	Extended	4/4X	$26
	R2PB30-E-Y-O	Yellow	1 N.O.	Extended	4/4X	$26
Mushroom	R2PB30-M-K-O	Black	1 N.O.	Mushroom	4/4X	$33
	R2PB30-M-G-O	Green	1 N.O.	Mushroom	4/4X	$33
	R2PB30-M-R-O	Red	1 N.O.	Mushroom	4/4X	$33
	R2PB30-M-R-C	Red	1 N.C.	Mushroom	4/4X	$33
	R2PB30-M-Y-O	Yellow	1 N.O.	Mushroom	4/4X	$33

Maintained

	Part Number	Color	Contacts	Type	Rating Type	List Price
Mushroom	R2PB30-2PM-G-O	Green	1 N.O.	Mushroom	4/4X	$59
	R2PB30-2PM-R-O	Red	1 N.O.	Mushroom	4/4X	$59
	R2PB30-2PM-R-C	Red	1 N.C.	Mushroom	4/4X	$59

Push Pull

	Part Number	Color	Contacts	Type	Rating Type	List Price
Mushroom	R2PB30-2TM-K-O	Black	1 N.O.	Mushroom	4/4X	$64
	R2PB30-2TM-R-C	Red	1 N.C.	Mushroom	4/4X	$64

PUSH BUTTONS (30mm) - PRICING

WEB STOCKED

Illuminated Push Buttons

Momentary

	Part Number	Color	Contacts	Type	Voltage	Rating Type	List Price
Extended	R2PB30-ILE-120-G	Green	1 N.O.	Extended	120V	4/4X	$70
	R2PB30-ILE-120-A	Amber	1 N.O.	Extended	120V	4/4X	$70
	R2PB30-ILE-120-B	Blue	1 N.O.	Extended	120V	4/4X	$70
	R2PB30-ILE-24-R	Red	1 N.O.	Extended	24V	4/4X	$70
	R2PB30-ILE-24-G	Green	1 N.O.	Extended	24V	4/4X	$70
	R2PB30-ILE-24-A	Amber	1 N.O.	Extended	24 ac/dc	4/4X	$70
	R2PB30-ILE-24-B	Blue	1 N.O.	Extended	24 ac/dc	4/4X	$70
Mushroom	R2PB30-ILM-120-R	Red	1 N.O.	Mushroom	120V	4/4X	$75
	R2PB30-ILM-120-G	Green	1 N.O.	Mushroom	120V	4/4X	$75
	R2PB30-ILM-120-A	Amber	1 N.O.	Mushroom	120V	4/4X	$75
	R2PB30-ILM-120-B	Blue	1 N.O.	Mushroom	120V	4/4X	$75
	R2PB30-ILM-24-R	Red	1 N.O.	Mushroom	24 ac/dc	4/4X	$75
	R2PB30-ILM-24-G	Green	1 N.O.	Mushroom	24 ac/dc	4/4X	$75
	R2PB30-ILM-24-A	Amber	1 N.O.	Mushroom	24 ac/dc	4/4X	$75
	R2PB30-ILM-24-B	Blue	1 N.O.	Mushroom	120V	4/4X	$75
Guarded	R2PB30-ILG-120-R	Red	1 N.O.	Guarded	120V	4/4X	$75
	R2PB30-ILG-120-G	Green	1 N.O.	Guarded	120V	4/4X	$75
	R2PB30-ILG-120-A	Amber	1 N.O.	Guarded	120V	4/4X	$75
	R2PB30-ILG-120-B	Blue	1 N.O.	Guarded	24 ac/dc	4/4X	$75
	R2PB30-ILG-24-R	Red	1 N.O.	Guarded	24 ac/dc	4/4X	$75
	R2PB30-ILG-24-G	Green	1 N.O.	Guarded	24 ac/dc	4/4X	$75
	R2PB30-ILG-24-A	Amber	1 N.O.	Guarded	24 ac/dc	4/4X	$75
	R2PB30-ILG-24-B	Blue	1 N.O.	Guarded	120V	4/4X	$75
Shrouded	R2PB30-ILS-120-R	Red	1 N.O.	Shrouded	120V	4/4X	$74
	R2PB30-ILS-120-G	Green	1 N.O.	Shrouded	120V	4/4X	$74
	R2PB30-ILS-120-A	Amber	1 N.O.	Shrouded	120V	4/4X	$74
	R2PB30-ILS-120-B	Blue	1 N.O.	Shrouded	24 ac/dc	4/4X	$74
	R2PB30-ILS-24-R	Red	1 N.O.	Shrouded	24 ac/dc	4/4X	$74
	R2PB30-ILS-24-G	Green	1 N.O.	Shrouded	24 ac/dc	4/4X	$74
	R2PB30-ILS-24-A	Amber	1 N.O.	Shrouded	24 ac/dc	4/4X	$74
	R2PB30-ILS-24-B	Blue	1 N.O.	Shrouded	24 ac/dc	4/4X	$74

Push Pull

	Part Number	Color	Contacts	Type	Voltage	Rating Type	List Price
Mushroom	R2PB30-IL2P-120-R	Red	1 N.O.	Mushroom	120V	4/4X	$88
	R2PB30-IL2P-120-G	Green	1 N.O.	Mushroom	120V	4/4X	$88
	R2PB30-IL2P-120-A	Amber	1 N.O.	Mushroom	120V	4/4X	$88
	R2PB30-IL2P-120-B	Blue	1 N.O.	Mushroom	120V	4/4X	$88
	R2PB30-IL2P-24-R	Red	1 N.O.	Mushroom	24 ac/dc	4/4X	$88
	R2PB30-IL2P-24-G	Green	1 N.O.	Mushroom	24 ac/dc	4/4X	$88
	R2PB30-IL2P-24-A	Amber	1 N.O.	Mushroom	24 ac/dc	4/4X	$88
	R2PB30-IL2P-24-B	Blue	1 N.O.	Mushroom	24 ac/dc	4/4X	$88

Price Effective May 1, 2022

SELECTOR SWITCHES - PRICING

WEB STOCKED

Benshaw's comprehensive line of 30mm selector switches encompasses 2 and 3 position models, with both maintained and spring return options. Highly customizable via several handle insert color options and contact block configurations, all selector switches are rated up to NEMA 4X.

All selector switches come with a black base.
Handle color is customizable.

- UL listed
- NEMA RATING: 1, 2, 3, 3R, 12, 13, 4, 4X

Fully-assembled operators come standard with one 3/16" (4.8mm) and three 1/16" (1.6mm) gaskets.

	Part Number	Handle Color	Contacts	Rating Type	List Price
	R2SW30-2PM-W-C	Black	1 N.C.	4/4X	$44
	R2SW30-2PM-W-O	Black	1 N.O.	4/4X	$44
	R2SW30-3PM-W-2O	White	2 N.O.	4/4X	$44

Price Effective May 1, 2022

PILOT LIGHTS (30mm) - PRICING

WEB STOCKED

Benshaw offers a complete line of standard and push-to-test 30mm pilot lights, both at 24V or 120V. As with all of Benshaw's pilot devices, all pilot lights are rated up to NEMA 4X.

All pilot lights are LED type.

- UL listed
- NEMA RATING: 1, 2, 3, 3R, 12, 13, 4, 4X

Standard Pilot Lights

Part Number	Color	Type	Voltage	Rating Type	List Price
R2PL30-120-A	Amber	Guarded	120V	4/4X	$57
R2PL30-120-R	Red	Guarded	120V	4/4X	$57
R2PL30-120-G	Green	Guarded	120V	4/4X	$57
R2PL30-120-B	Blue	Guarded	120V	4/4X	$57
R2PL30-120-W	White	Guarded	120V	4/4X	$57
R2PL30-24-A	Amber	Guarded	24 ac/dc	4/4X	$57
R2PL30-24-R	Red	Guarded	24 ac/dc	4/4X	$57
R2PL30-24-G	Green	Guarded	24 ac/dc	4/4X	$57
R2PL30-24-B	Blue	Guarded	24 ac/dc	4/4X	$57
R2PL30-24-W	White	Guarded	24 ac/dc	4/4X	$57

Price Effective May 1, 2022

PILOT LIGHTS (30mm) - PRICING

WEB STOCKED

Push to Test Pilot Lights

	Part Number	Color	Type	Contact Type	Voltage	Rating Type	List Price
Extended	R2PL30-TE-120-A	Amber	Extended	Silver	120V	4/4X	$95
	R2PL30-TE-120-B	Blue	Extended	Silver	120V	4/4X	$95
	R2PL30-TE-120-G	Green	Extended	Silver	120V	4/4X	$95
	R2PL30-TE-120-R	Red	Extended	Silver	120V	4/4X	$95
	R2PL30-TE-120-W	White	Extended	Silver	120V	4/4X	$95
	R2PL30-TE-24-A	Amber	Extended	Gold Plated	24 ac/dc	4/4X	$108
	R2PL30-TE-24-B	Blue	Extended	Gold Plated	24 ac/dc	4/4X	$108
	R2PL30-TE-24-G	Green	Extended	Gold Plated	24 ac/dc	4/4X	$108
	R2PL30-TE-24-R	Red	Extended	Gold Plated	24 ac/dc	4/4X	$108
	R2PL30-TE-24-W	White	Extended	Gold Plated	24 ac/dc	4/4X	$108
Mushroom	R2PL30-TM-120-A	Amber	Mushroom	Silver	120V	4/4X	$104
	R2PL30-TM-120-B	Blue	Mushroom	Silver	120V	4/4X	$104
	R2PL30-TM-120-G	Green	Mushroom	Silver	120V	4/4X	$104
	R2PL30-TM-120-R	Red	Mushroom	Silver	120V	4/4X	$104
	R2PL30-TM-120-W	White	Mushroom	Silver	120V	4/4X	$104
	R2PL30-TM-24-A	Amber	Mushroom	Gold Plated	24 ac/dc	4/4X	$117
	R2PL30-TM-24-B	Blue	Mushroom	Gold Plated	24 ac/dc	4/4X	$117
	R2PL30-TM-24-G	Green	Mushroom	Gold Plated	24 ac/dc	4/4X	$117
	R2PL30-TM-24-R	Red	Mushroom	Gold Plated	24 ac/dc	4/4X	$117
	R2PL30-TM-24-W	White	Mushroom	Gold Plated	24 ac/dc	4/4X	$117
Guarded	R2PL30-TG-120-A	Amber	Guarded	Silver	120V	4/4X	$104
	R2PL30-TG-120-B	Blue	Guarded	Silver	120V	4/4X	$104
	R2PL30-TG-120-G	Green	Guarded	Silver	120V	4/4X	$104
	R2PL30-TG-120-R	Red	Guarded	Silver	120V	4/4X	$104
	R2PL30-TG-120-W	White	Guarded	Silver	120V	4/4X	$104
	R2PL30-TG-24-A	Amber	Guarded	Gold Plated	24 ac/dc	4/4X	$117
	R2PL30-TG-24-B	Blue	Guarded	Gold Plated	24 ac/dc	4/4X	$117
	R2PL30-TG-24-G	Green	Guarded	Gold Plated	24 ac/dc	4/4X	$117
	R2PL30-TG-24-R	Red	Guarded	Gold Plated	24 ac/dc	4/4X	$117
	R2PL30-TG-24-W	White	Guarded	Gold Plated	24 ac/dc	4/4X	$117
Shrouded	R2PL30-TS-120-A	Amber	Shrouded	Silver	120V	4/4X	$113
	R2PL30-TS-120-B	Blue	Shrouded	Silver	120V	4/4X	$113
	R2PL30-TS-120-G	Green	Shrouded	Silver	120V	4/4X	$113
	R2PL30-TS-120-R	Red	Shrouded	Silver	120V	4/4X	$113
	R2PL30-TS-120-W	White	Shrouded	Silver	120V	4/4X	$113
	R2PL30-TS-24-A	Amber	Shrouded	Gold Plated	24 ac/dc	4/4X	$126
	R2PL30-TS-24-B	Blue	Shrouded	Gold Plated	24 ac/dc	4/4X	$126
	R2PL30-TS-24-G	Green	Shrouded	Gold Plated	24 ac/dc	4/4X	$126
	R2PL30-TS-24-R	Red	Shrouded	Gold Plated	24 ac/dc	4/4X	$126
	R2PL30-TS-24-W	White	Shrouded	Gold Plated	24 ac/dc	4/4X	$126

Price Effective May 1, 2022

ADDITIONAL ACCESSORIES - PRICING

Potentiometers

Benshaw offers standard 2 Watt potentiometers with prewired terminal blocks.

- UL listed
- NEMA RATING: 1, 2, 3, 3R, 12, 13, 4, 4X

Fully-assembled operators come standard with one 3/16" (4.8mm) and three 1/16" (1.6mm) gaskets.

	Part Number	Color	Contacts	Rating Type	List Price
	R2PB30-POT-5	Black	5K Ohm	4/4X	$96
	R2PB30-POT-10	Black	10K Ohm	4/4X	$96

* 5/64" Allen Wrench needed for installation.

Wobble Stick

	Part Number	Color	Contacts	Rating Type	List Price
- UL listed - NEMA RATING: 4, 4X	R2PB-WS-OC	Black	1 N.O. 1 N.C.	4/4X	$55

*Spring return action to center.

Price Effective May 1, 2022

ADDITIONAL ACCESSORIES - PRICING

Legends

Benshaw offers a comprehensive line of legends in order to properly label all pilot devices.

2" x 2" Square Legends Adhesive Back

Part Number	Legend	Description	List Price
LG-100300-000	Close	Black with white lettering	$3
LG-100300-001	Down	Black with white lettering	$3
LG-100300-002	Emergency Stop	Black with white lettering	$3
LG-100300-003	Fault	Black with white lettering	$3
LG-100300-004	Forward	Black with white lettering	$3
LG-100300-005	Hand	Black with white lettering	$3
LG-100300-006	Jog	Black with white lettering	$3
LG-100300-007	Jog Forward	Black with white lettering	$3
LG-100300-008	Jog Reverse	Black with white lettering	$3
LG-100300-009	Manual	Black with white lettering	$3
LG-100300-010	Motor Run	Black with white lettering	$3
LG-100300-011	Off	Black with white lettering	$3
LG-100300-012	On	Black with white lettering	$3
LG-100300-013	Open	Black with white lettering	$3
LG-100300-014	Overload	Black with white lettering	$3
LG-100300-015	Power Off	Black with white lettering	$3
LG-100300-016	Power On	Black with white lettering	$3
LG-100300-017	Push to Reset	Black with white lettering	$3
LG-100300-018	Push to Test	Black with white lettering	$3
LG-100300-019	Raise	Black with white lettering	$3
LG-100300-020	Ready	Black with white lettering	$3
LG-100300-021	Reset	Black with white lettering	$3
LG-100300-022	Reverse	Black with white lettering	$3
LG-100300-023	Run	Black with white lettering	$3
LG-100300-024	Start	Black with white lettering	$3
LG-100300-025	Stop	Black with white lettering	$3
LG-100300-026	Test	Black with white lettering	$3
LG-100300-027	Trip	Black with white lettering	$3
LG-100300-028	Auto / Hand	Black with white lettering	$3
LG-100300-029	Auto / Manual	Black with white lettering	$3
LG-100300-030	Down / Up	Black with white lettering	$3
LG-100300-031	Fast / Slow	Black with white lettering	$3
LG-100300-032	Fwd / Rev	Black with white lettering	$3
LG-100300-033	Hand / Auto	Black with white lettering	$3

Price Effective May 1, 2022

ADDITIONAL ACCESSORIES - PRICING

2" x 2" Square Legends Adhesive Back

Part Number	Legend	Description	List Price
LG-100300-034	Local / Remote	Black with white lettering	$3
LG-100300-035	Manual / Auto	Black with white lettering	$3
LG-100300-036	Off / On	Black with white lettering	$3
LG-100300-037	On / Off	Black with white lettering	$3
LG-100300-038	Open / Close	Black with white lettering	$3
LG-100300-039	Pull Start / Push Stop	Black with white lettering	$3
LG-100300-040	Push Off / Pull On	Black with white lettering	$3
LG-100300-041	Pull On / Push Off	Black with white lettering	$3
LG-100300-042	Push to Stop / Pull to Start	Black with white lettering	$3
LG-100300-043	Rev / Fwd	Black with white lettering	$3
LG-100300-044	Run / Jog	Black with white lettering	$3
LG-100300-045	Start / Stop	Black with white lettering	$3
LG-100300-046	Stop / Start	Black with white lettering	$3
LG-100300-047	Up / Down	Black with white lettering	$3
LG-100300-048	Auto / Off / Hand	Black with white lettering	$3
LG-100300-049	Auto / Man / Off	Black with white lettering	$3
LG-100300-050	Fwd / Off / Rev	Black with white lettering	$3
LG-100300-051	Fwd / Off / Rev	Black with white lettering	$3
LG-100300-052	H / O / A	Black with white lettering	$3
LG-100300-053	Off / Start	Black with white lettering	$3
LG-100300-054	Start / Run	Black with white lettering	$3
LG-100300-055	Speed 0-100	Black with white lettering	$3
LG-100300-056	Close	White with black lettering	$3
LG-100300-057	Down	White with black lettering	$3
LG-100300-058	Emergency Stop	White with black lettering	$3
LG-100300-059	Fault	White with black lettering	$3
LG-100300-060	Forward	White with black lettering	$3
LG-100300-061	Hand	White with black lettering	$3
LG-100300-062	Jog	White with black lettering	$3
LG-100300-063	Jog Forward	White with black lettering	$3
LG-100300-064	Jog Reverse	White with black lettering	$3
LG-100300-065	Manual	White with black lettering	$3
LG-100300-066	Motor Run	White with black lettering	$3
LG-100300-067	Off	White with black lettering	$3
LG-100300-068	On	White with black lettering	$3
LG-100300-069	Open	White with black lettering	$3
LG-100300-070	Overload	White with black lettering	$3
LG-100300-071	Power Off	White with black lettering	$3
LG-100300-072	Power On	White with black lettering	$3
LG-100300-073	Push to Reset	White with black lettering	$3

Price Effective May 1, 2022

ADDITIONAL ACCESSORIES - PRICING

2″ x 2″ Square Legends Adhesive Back

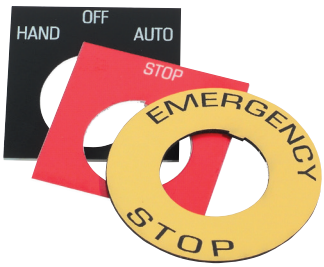

Part Number	Legend	Description	List Price
LG-100300-074	Push to Test	White with black lettering	$3
LG-100300-075	Raise	White with black lettering	$3
LG-100300-076	Ready	White with black lettering	$3
LG-100300-077	Reset	White with black lettering	$3
LG-100300-078	Reverse	White with black lettering	$3
LG-100300-079	Run	White with black lettering	$3
LG-100300-080	Start	White with black lettering	$3
LG-100300-081	Stop	White with black lettering	$3
LG-100300-082	Test	White with black lettering	$3
LG-100300-083	Trip	White with black lettering	$3
LG-100300-084	Auto / Hand	White with black lettering	$3
LG-100300-085	Auto / Manual	White with black lettering	$3
LG-100300-086	Down / Up	White with black lettering	$3
LG-100300-087	Fast / Slow	White with black lettering	$3
LG-100300-088	Fwd / Rev	White with black lettering	$3
LG-100300-089	Hand / Auto	White with black lettering	$3
LG-100300-090	Local / Remote	White with black lettering	$3
LG-100300-091	Manual / Auto	White with black lettering	$3
LG-100300-092	Off / On	White with black lettering	$3
LG-100300-093	On / Off	White with black lettering	$3
LG-100300-094	Open / Close	White with black lettering	$3
LG-100300-095	Pull Start / Push Stop	White with black lettering	$3
LG-100300-096	Push Off Pull On	White with black lettering	$3
LG-100300-097	Push On / Push Off	White with black lettering	$3
LG-100300-098	Push to Stop / Pull to Start	White with black lettering	$3
LG-100300-099	Rev / Fwd	White with black lettering	$3
LG-100300-100	Run / Jog	White with black lettering	$3
LG-100300-101	Start / Stop	White with black lettering	$3
LG-100300-102	Stop / Start	White with black lettering	$3
LG-100300-103	Up / Down	White with black lettering	$3
LG-100300-104	Auto / Off / Hand	White with black lettering	$3
LG-100300-105	Auto / Man / Off	White with black lettering	$3
LG-100300-106	Fwd / Auto / Rev	White with black lettering	$3
LG-100300-107	Fwd / Off / Rev	White with black lettering	$3
LG-100300-108	H / O / A	White with black lettering	$3
LG-100300-109	Off / Run / Start	White with black lettering	$3
LG-100300-110	Off / Start / Run	White with black lettering	$3
LG-100300-111	Speed 0-100	White with black lettering	$3

2 - 13/32″ Diameter Circle Legends (2″ x 2″ Square Legends Adhesive Back)

Part Number	Legend	List Price
LG-100300-112	Emergency Stop	$3

Price Effective May 1, 2022

CONTACT BLOCKS - PRICING

WEB STOCKED

Benshaw's line of 30mm Contact Blocks is designed to save you time and cost. These robust yet easy to install blocks enable one pilot device to operate several control circuits. Our heavy-duty construction ensures that these contact blocks stay connected. This mix and match flexibility allows you to create a unique product to accommodate your needs.

R2N030
(with IP20 guard removed)

Ratings

	Designation	Maximum Voltage	Make	Break	Maximum Continuous Thermal Current
AC Contact Rating	A600	600V AC	7200 VA	720 VA	Ith: 10A
DC Contact Rating	P300	250V DC	138 VA	138 VA	Ith: 5A

R2DB30
(with IP20 guard)

Part Number	Color	Contacts	List Price
R2NO30	Green	1 N.O.	$10
R2NC30	Red	1 N.C	$10
R2EM30	White	1 N.O. Early make	$13
R2DB30	Black	1 N.C Delayed Break	$13
R2NOG30	Green	1 N.O. Gold Terminals	$19
R2NCG30	Red	1 N.C Gold Terminals	$19
R2EMG30	White	1 N.O. Early make Gold Terminals	$22
R2DBG30	Black	1 N.C Delayed Break Gold Terminals	$22

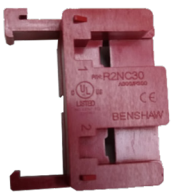

R2NC30
(with IP20 guard removed)

*Each Contact Block comes standard with an IP20 guard.

Price Effective May 1, 2022

DESIGN YOUR CUSTOMIZED PUSH BUTTONS - PRICING

Non-Illuminated Push Buttons

Pricing

	Part Number	Description	List Price
Level 1 - Base	R2PB30	30MM Push Button	Included
Level 2 - Type	F	Flush (Momentary)	$14
	G	Guarded Flush (Momentary)	$18
	E	Extended (Momentary)	$14
	X	Guarded Extended (Momentary)	$18
	M	Mushroom (Momentary)	$21
	J	Jumbo Mushroom (Momentary)	$24
	H	Shrouded Mushroom (Momentary)	$27
	S	Shrouded Jumbo Mushroom (Momentary)	$29
	2PM	Push-Pull Mushroom	$46
	2PJ	Push-Pull Jumbo Mushroom	$51
	2TM	Push-Twist Mushroom	$49
	3CI	Momentary Out, Maintained Center, Maintained In	$45
	3C	Momentary Out, Maintained Center, Momentary In	$45
Level 3 - Cap Color	K	Black Cap	Included
	B	Blue Cap	Included
	G	Green Cap	Included
	X	Grey Cap	Included
	R	Red Cap	Included
	W	White Cap	Included
	Y	Yellow Cap	Included
Level 4 - Contact Blocks	Blank	Left Side: Operator without Contact Blocks	Included
	O	Left Side: 1 Normally Open Contact Block	$11
	C	Left Side: 1 Normally Closed Contact Block	$11
	E	Left Side: 1 Early Make Contact Block	$13
	D	Left Side: 1 Delayed Break Contact Block	$13
	2O	Left Side: 2 normally Open Contact Blocks	$21
	2C	Left Side: 2 Normally Closed Contact Blocks	$21
	OC	Left Side: 1 Normally Open and 1 Normally Closed Contact Block	$21
	CD	Left Side: 1 Normally Closed and 1 Delayed Break Contact Block (3 Position)	$28

Price Effective May 1, 2022

DESIGN YOUR CUSTOMIZED PUSH BUTTONS - PRICING

Illuminated Push Buttons

Pricing

	Part Number	Description	List Price
Level 1 - Base	R2PB30	30MM Push Button	Included
Level 2 - Type	ILE	Illuminated Extended (Momentary)	$56
	ILM	Illuminated Mushroom (Momentary)	$63
	ILG	Illuminated Guarded (Momentary)	$63
	ILS	Illuminated Shrouded (Momentary)	$70
	IL2P	Illuminated 2-Position Push-Pull Mushroom (Maintained)	$80
Level 3 - Voltage Rating	24	24V Full Voltage Operator	Included
	120	120V Full Voltage Operator	Included
Level 4 - LED and Lens Color	A	Amber LED and Lens	Included
	B	Blue LED and Lens	Included
	G	Green LED and Lens	Included
	R	Red LED and Lens	Included
	W	White LED and Lens	Included
Level 5 - Contact Blocks	(Blank)	Left Side: Operator without Contact Blocks	Included
	O	Left Side: 1 Normally Open Contact Block	$11
	C	Left Side: 1 Normally Closed Contact Block	$11
	E	Left Side: 1 Early Make Contact Block	$13
	D	Left Side: 1 Delayed Break Contact Block	$13
	2O	Left Side: 2 Normally Open Contact Blocks	$21
	2C	Left Side: 2 Normally Closed Contact Blocks	$21
	OC	Left Side: 1 Normally Open and 1 Normally Closed Contact Block	$21

Price Effective May 1, 2022

DESIGN YOUR CUSTOMIZED SELECTOR SWITCHES - PRICING

Pricing

	Part Number	Description	List Price
Level 1 - Base	RS2W30	30MM Selector Switch	Included
Level 2 - Operator Function	2PM	2 Position Maintained	$20
	2PRLR	2 Position Spring Return, Left to Right	$31
	2PRRL	2 Position Spring Return, Right to Left	$31
	3PM	3 Position Maintained	$20
	3PRLC	3 Position Spring Return, Left to Center	$31
	3PRRC	3 Position Spring Return, Right to Center	$31
	3PLRC	3 Position Spring Return, Left and Right to Center	$31
	4PM	4 Position Maintained	$20
	4PR43	4 Position Spring Return, Position 4 to 3	$31
	4P1243	4 Position Spring Return, Position 1 to 2 and 4 to 3	$31
Level 3 - Handle Color	B	Blue	Included
	G	Green	Included
	X	Grey	Included
	R	Red	Included
	W	White	Included
	Y	Yellow	Included
Level 4 - Contact Blocks	(Blank)	Left Side: Operator without Contact Blocks	Included
	O	Left Side: 1 Normally Open Contact Block	$11
	C	Left Side: 1 Normally Closed Contact Block	$11
	E	Left Side: 1 Early Make Contact Block	$13
	D	Left Side: 1 Delayed Break Contact Block	$13
	2O	Left Side: 2 Normally Open Contact Blocks	$21
	2C	Left Side: 2 Normally Closed Contact Blocks	$21
	OC	Left Side: 1 Normally Open and 1 Normally Closed Contact Block	$21

Price Effective May 1, 2022

DESIGN YOUR CUSTOMIZED PILOT LIGHTS - PRICING

Configurator

Only one option can be selected from each group.

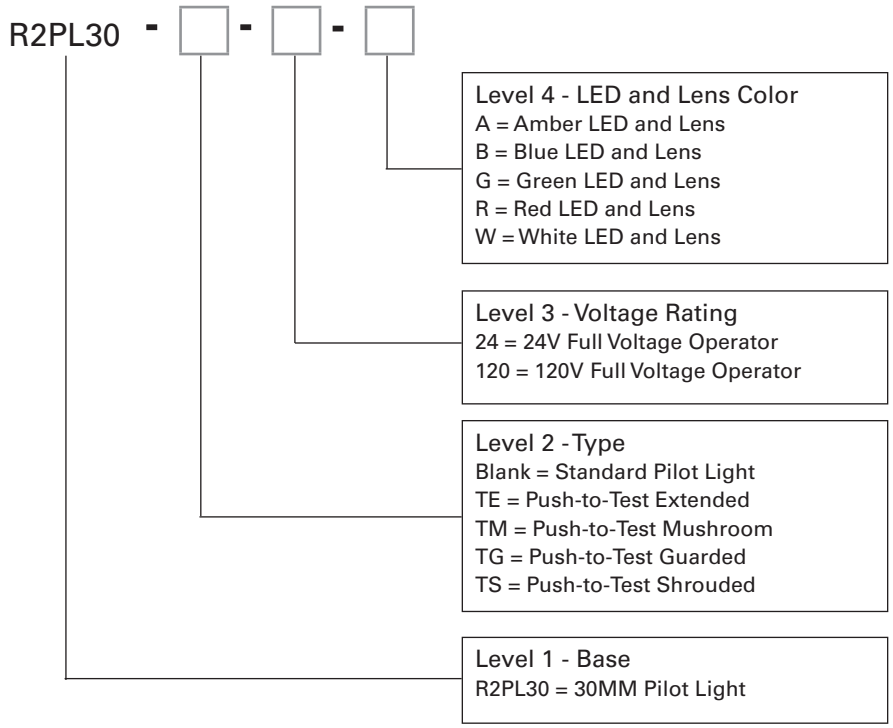

Pricing

	Part Number	Description	List Price
Level 1 - Base	R2PL30	30MM Pilot Light	Included
Level 2 - Type	(Blank)	Standard Pilot Light	$48
	TE	Push-to-Test Extended	$80
	TM	Push-to-Test Mushroom	$87
	TG	Push-to-Test Guarded	$87
	TS	Push-to-Test Shrouded	$94
Level 3 - Voltage Rating	24	24V Full Voltage Operator (Standard Operator)	$0
	24	24V Full Voltage Operator (Push-to-Test)*	$11
	120	120V Full Voltage Operator	Included
Level 4 - LED and Lens Color	A	Amber LED and Lens	Included
	B	Blue LED and Lens	Included
	G	Green LED and Lens	Included
	R	Red LED and Lens	Included
	W	White LED and Lens	Included

* All 24V Push-to-Test Pilot Lights come standard with gold plated contacts.
Price Effective May 1, 2022

Benshaw Group

Benshaw, Inc.
615 Alpha Drive
Pittsburgh, PA 15238 United States
Toll Free: 1-800-441-8235
Phone: 412-968-0100
Fax: 412-968-5415

Benshaw Canada Controls, Inc.
550 Bright Street East
Listowel, Ontario N4W 3W3 Canada
Toll Free: 1-877-291-5112
Phone: 519-291-5112
Fax: 519-291-2595

-

Benshaw Excel
Detroit, MI

Benshaw - Aucom Ltd.
New Zealand

Benshaw - Aucom Ltd. International
- Germany
- Dubai
- Korea

www.Benshaw.com

BENSHAW
Applied Motor Controls

Specifications subject to change without notice. | Copyright © 2021 Benshaw, Inc. | All rights reserved.
CAT-2000-00-00 | Updated 04-12-2022 | Printed in the USA

Benshaw Group

Benshaw, Inc.
615 Alpha Drive
Pittsburgh, PA 15238 United States
Toll Free: 1-800-441-8235
Phone: 412-968-0100
Fax: 412-968-5415

Benshaw Canada Controls, Inc.
550 Bright Street East
Listowel, Ontario N4W 3W3 Canada
Toll Free: 1-877-291-5112
Phone: 519-291-5112
Fax: 519-291-2595

-

Benshaw Excel
Detroit, MI

Benshaw - Aucom Ltd.
New Zealand

Benshaw - Aucom Ltd. International
- Germany
- Dubai
- Korea

www.Benshaw.com

BENSHAW
Applied Motor Controls

Specifications subject to change without notice. | Copyright © 2021 Benshaw, Inc. | All rights reserved.
CAT-2000-00-00 | Updated 04-12-2022 | Printed in the USA